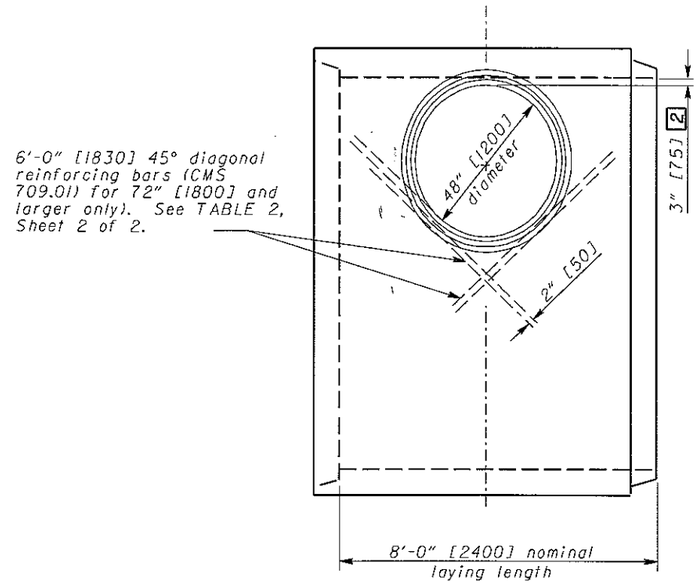

PLAN VIEW

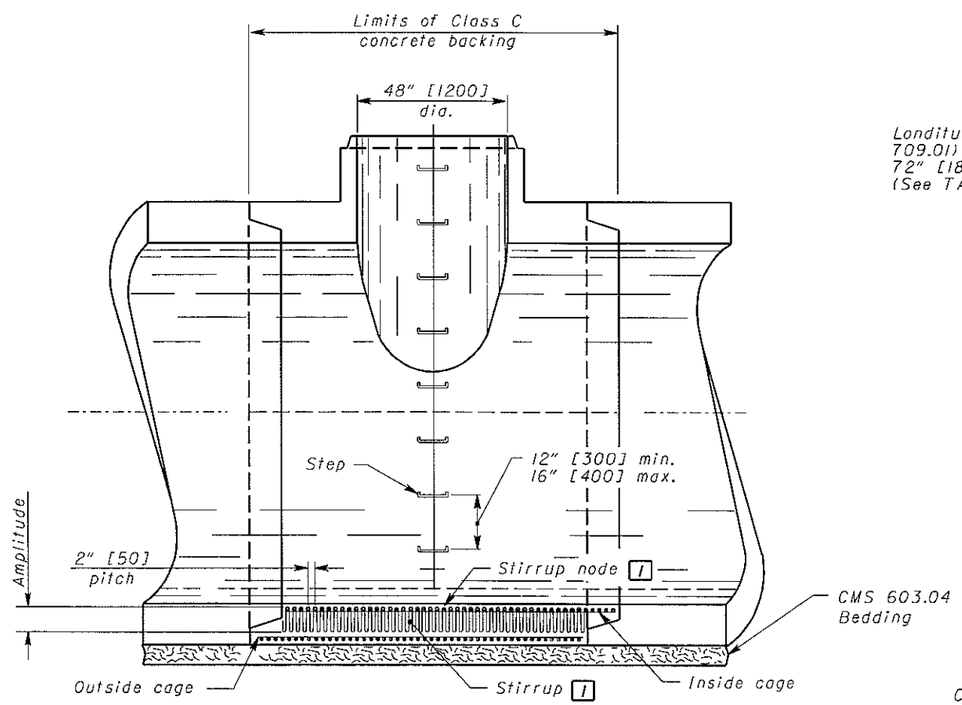

SECTION A-A

(Showing stirrup detail)

LEGEND

1. If required by conduit specification.
2. On all sizes except 48" [1200].
3. One-half of the required number to each side of hole. (See Sht. 2/2.)

NOTES

GENERAL: Base pipe, 48" [1200] dia. through 144" [3600] dia., shall consist of the design shown and as required for the stronger of the two adjoining sections of conduit. Other manhole components above the base shall be as detailed or specified on **SCD MH-1.2.**

APPLICATION: The Manhole No. 4 shown hereon may be used where no change in pipe size, direction or slope occurs, and no lateral sewers enter the manhole below the riser section.

BEDDING: Bedding shall be the same as used under the adjoining conduits and shall comply with the requirements of CMS 603.04.

STEPS: The steps shall comply with the requirements set forth on **SCD MH-1.1.**

PAYMENT: Payment for Manhole No. 4 shall include only the cost of the eccentric spur, additional pipe reinforcing, concrete backing, steps, riser sections, rings, castings and drop pipes. No deductions will be made in the lengths of the sanitary sewer conduit.

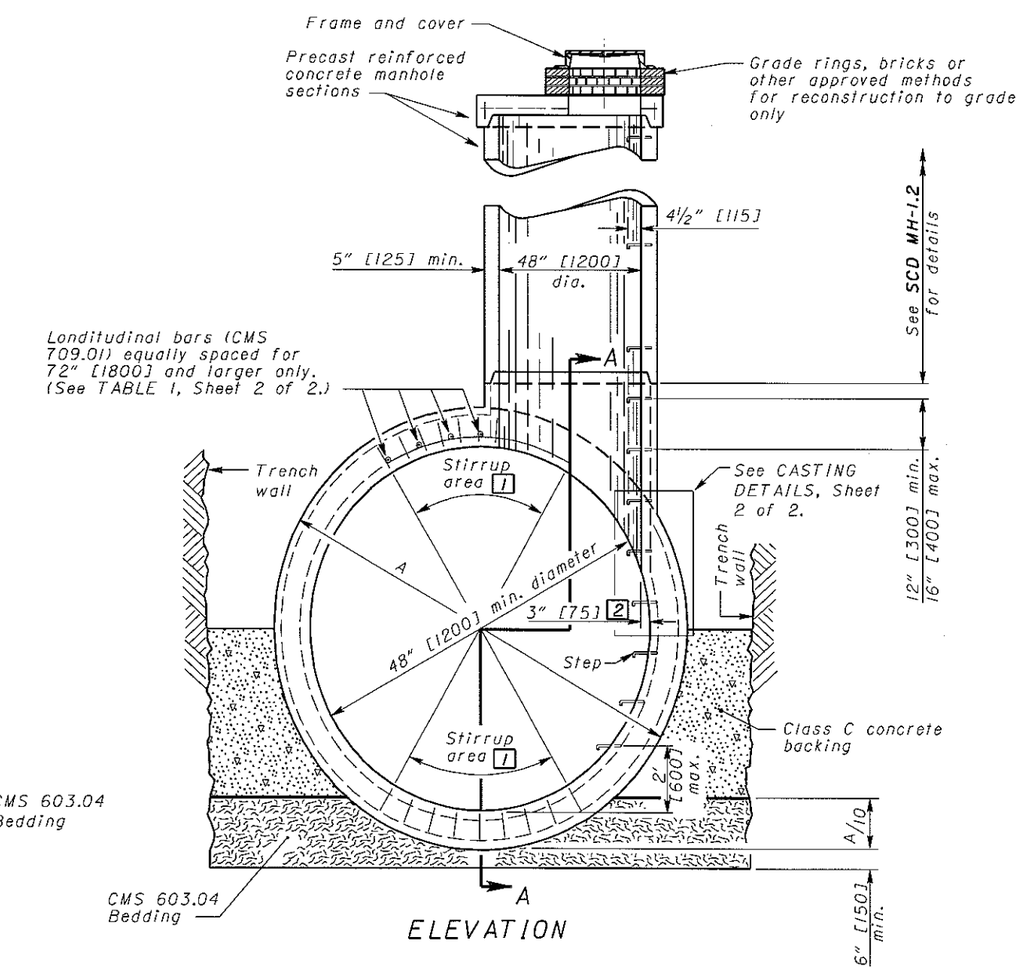

ELEVATION

OHIO DEPARTMENT OF TRANSPORTATION

ENGINEER OF BRIDGES

DATE 7-20-01 7-19-02

HYDRAULIC ENGINEER D. Gruver

All metric dimensions [ ] are in millimeters unless otherwise noted.

OFFICE OF STRUCTURAL ENGINEERING

STANDARD HYDRAULIC CONSTRUCTION DRAWING

MANHOLE No. 4

NUMBER MH-2.1

1/2