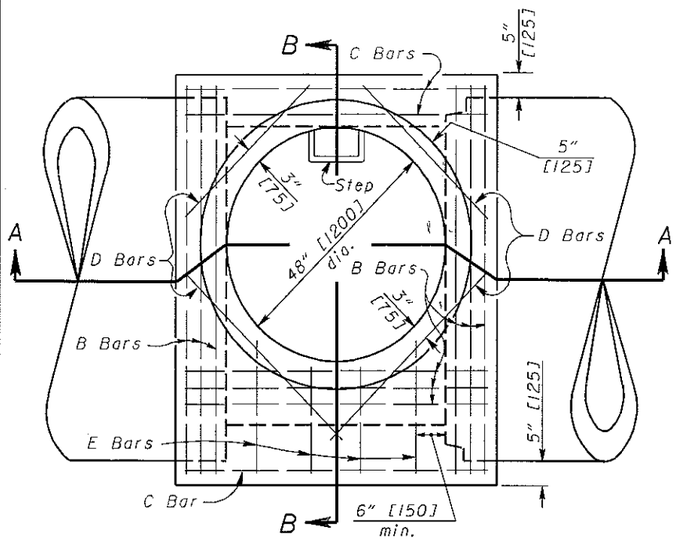

PLAN VIEW

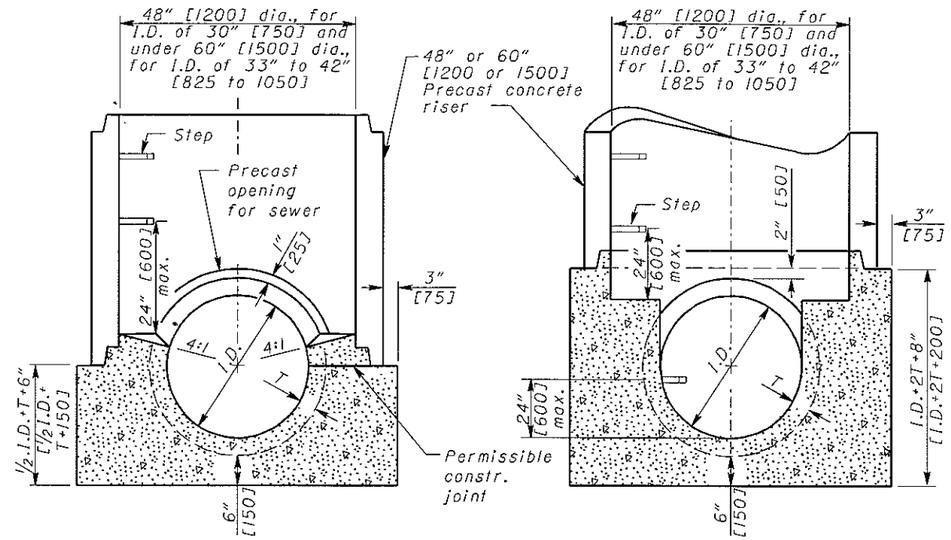

MANHOLE BASE ON SEWER 42" [1050] AND UNDER

NOTES

MANHOLE: Manhole No. 5 shall consist of a base or bottom as detailed hereon and other manhole components as detailed or specified on **SCD MH-1.2.**

In lieu of the tongue and groove junction between the riser and the base, the base may have a flat surface and the riser may have a square end set in a bed of mortar on the base.

OPENINGS: Openings for 42" [1050] and under inlet and outlet sewer pipes shall be prefabricated in the riser section unless the base is built to an elevation 2" [50] above the manhole top of the inlet and outlet pipes.

CONCRETE: Concrete for the bases may be Class C or meet the requirements of CMS 706.13. The bases may be precast or cast in place. If precast, the base on sewers 42" [1050] and under shall have sufficient steel reinforcement to permit shipping and placement without damage to the base. The base on sewers 48" [1200] and over shall be reinforced as shown.

STEPS: Steps shall comply with the requirements set forth on **SCD MH-1.1.**

T = Wall thickness of intercepting sewer pipe

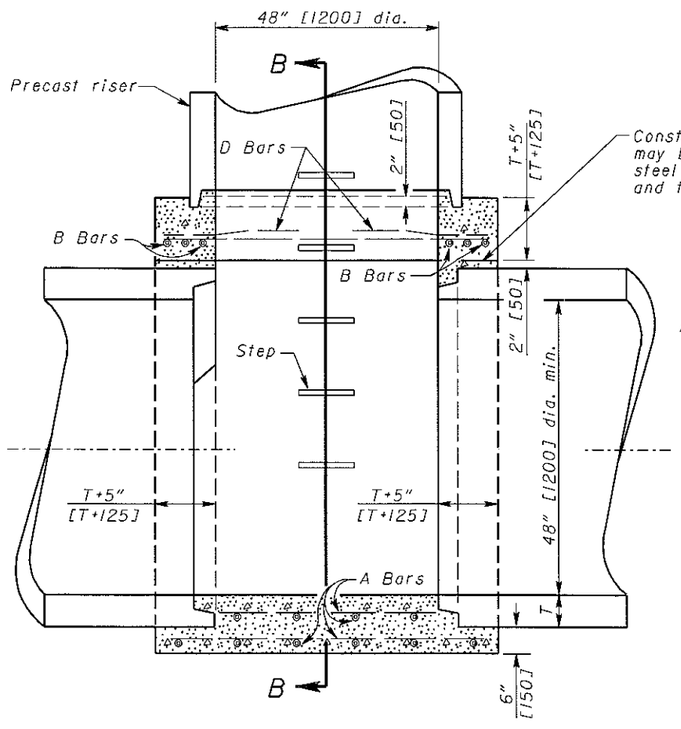

SECTION A-A

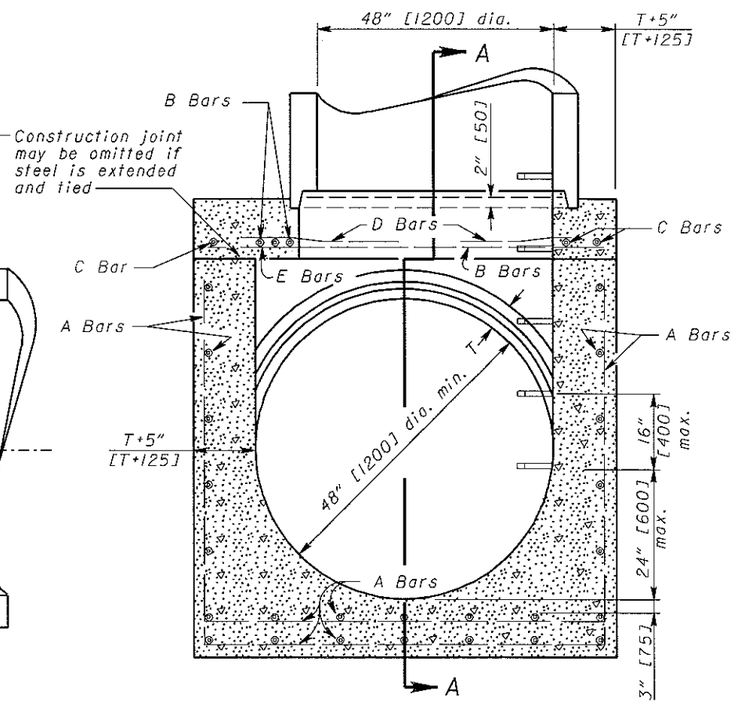

SECTION B-B

MANHOLE BASE ON SEWER 42" [1200] AND OVER

REINFORCING STEEL LIST

BAR	SPACING	BAR SIZES FOR SEWERS		
		48" to 60" [1200 to 1500]	66" to 78" [1650 to 1950]	84" to 96" [2100 to 2400]
A	12" [300] c/c bothways	#5 [#16M]	#6 [#19M]	#7 [#22M]
B	3" [75] c/c bothways	#5 [#16M]	#6 [#19M]	#7 [#22M]
C	as shown	#5 [#16M]	#6 [#19M]	#7 [#22M]
D	as shown	#5 [#16M]	#5 [#16M]	#5 [#16M]
E	12" [300] c/c	#5 [#16M]	#5 [#16M]	#5 [#16M]

Included for estimating purposes only. The cost of furnishing and placing all reinforcing steel shall be included in Item 604 for payment.

THIS DRAWING REPLACES MH-1.3M DATED 9-6-95.

OHIO DEPARTMENT OF TRANSPORTATION
Brad Fagrell
ENGINEER OF BRIDGES

DATE 7-20-01

HYDRAULIC ENGINEER D. Gruver

All metric dimensions (in brackets [ ]) are in millimeters unless otherwise noted.

OFFICE OF STRUCTURAL ENGINEERING

STANDARD HYDRAULIC CONSTRUCTION DRAWING

MANHOLE No. 5

NUMBER MH-1.3

1/1