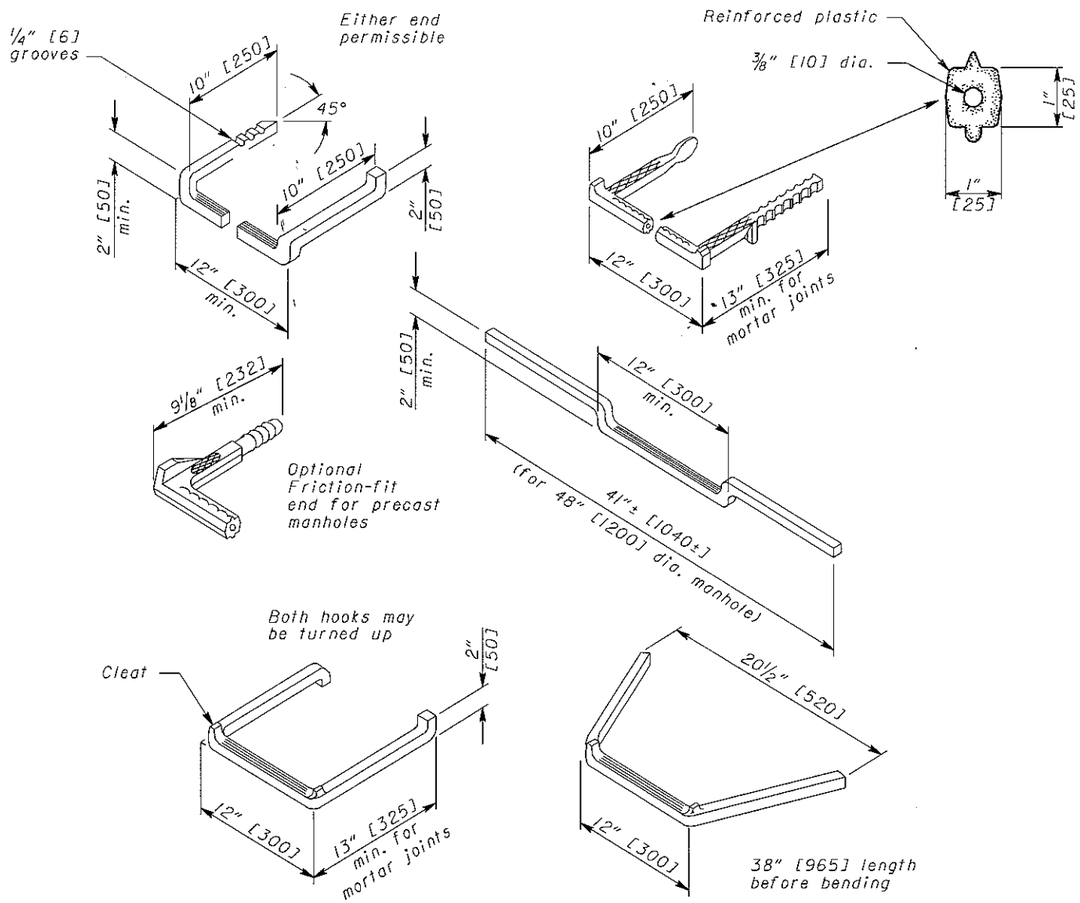

Steps shall have a minimum cross sectional dimension of 1" [25] for ferrous metal and 3/4" [19] for aluminum.

STEP DETAILS

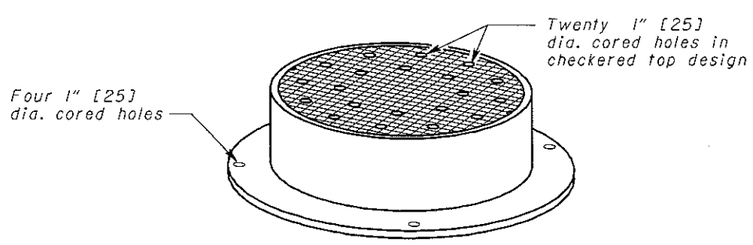

FRAME & COVER

NOTES

GENERAL: See Sheet 1 of 2 for additional notes.

FRAME AND COVER: The frame and cover shall meet CMS 711.14 requirements or be a heavy design (475 lbs. [215 kg] min. total weight) when the manhole is placed within the limits of the pavement or shoulder. Otherwise, the light design (275 lbs. [124 kg] min.) may be used. Bearing areas shall be finished smooth and fitted so as to provide a firm and even seat for all portions of the cover in the frame. Each cover shall seat in its frame without rocking and shall be marked as a matched frame and cover before delivery to the project. The base of the frame shall be set in a full bed of Portland cement mortar and adjusted to conform to the finished pavement or shoulder elevation and slope. Castings meeting CMS 604 requirements and designed essentially the same and equally as strong as those shown shall be provided.

STEPS: Steps shall conform to the material requirements of CMS 604. All steps shall have a depressed tread or a 1/2" [13] minimum cleat height at the ends.

Steps installed in fresh concrete shall be embedded to a minimum depth of 4" [100]. Steps installed in mortar joints shall be embedded to a minimum depth or 7" [175].

Friction-fit steps meeting the requirements of CMS 711.31 with a rebar may be used in precast manholes. The receiving holes for friction-fit steps shall not penetrate the manhole wall.

The Engineer may require the contractor to test load a maximum of one step per manhole to a proof load of 400 lbs. [1780 N] in direct pull. The equipment and method used shall meet the approval of the Engineer. If the selected step fails the pullout test, the remaining steps in that manhole shall also be tested. All steps not passing the pullout test shall be removed and a new step installed and tested to the satisfaction of the Engineer. Cost of testing shall be incidental to the unit price bid for the manhole.

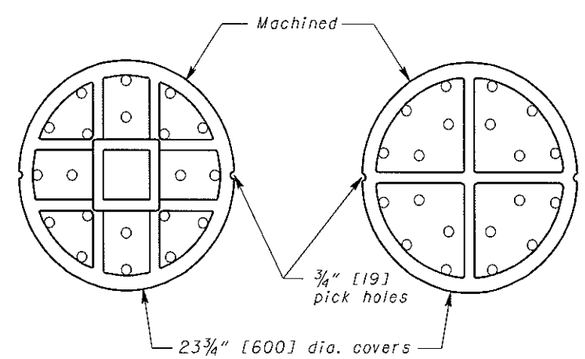

HEAVY DUTY LIGHT DUTY

COVERS - BOTTOM VIEW

OHIO DEPARTMENT OF TRANSPORTATION
ENGINEER OF BRIDGES

DATE
7-20-01
7-19-02

HYDRAULIC ENGINEER
J. Syar

All metric dimensions in brackets [ ] are in millimeters unless otherwise noted.

OFFICE OF STRUCTURAL ENGINEERING

STANDARD HYDRAULIC CONSTRUCTION DRAWING
MANHOLE No. 1

NUMBER
MH-1.1