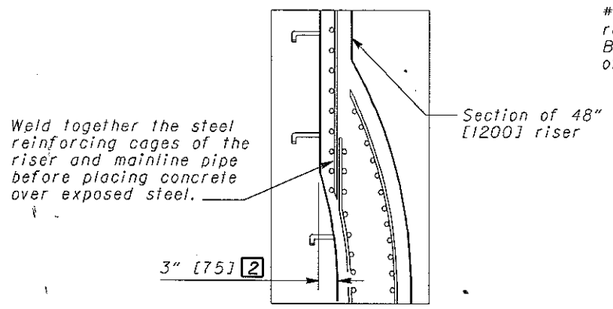

PLANT FABRICATED

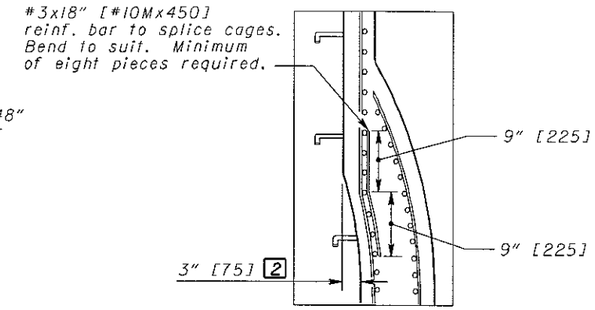

INTEGRALLY CAST

See ELEVATION Detail, Sheet 1 of 2.

CASTING DETAILS

LEGEND

1. If required by conduit specification. (See Sht. 1/2.)
2. On all sizes except 48" [1200].
3. One-half of the required number to each side of hole.

See ELEVATION Detail, Sheet 1 of 2.

TABLE 1 (English)

D-LOAD	1000			1350			2000			3000		
Dia.	Longitudinal Bars			Longitudinal Bars			Longitudinal Bars			Longitudinal Bars		
	Size	Length	No. Req'd	Size	Length	No. Req'd	Size	Length	No. Req'd	Size	Length	No. Req'd
72"	#5	7'-5"	4	#5	7'-5"	4	#5	7'-5"	4	#5	7'-5"	4
78"	#6	7'-5"	4	#6	7'-5"	4	#6	7'-5"	4	#6	7'-5"	4
84"	#6	7'-5"	4	#6	7'-5"	4	#6	7'-5"	4	#6	7'-5"	4
90"	#6	7'-5"	4	#6	7'-5"	4	#6	7'-5"	4	#6	7'-5"	4
96"	#6	7'-5"	4	#6	7'-5"	4	#6	7'-5"	4	#6	7'-5"	4
102"	#6	7'-5"	4	#6	7'-5"	4	#6	7'-5"	4	#6	7'-5"	4
108"	#6	7'-5"	4	#6	7'-5"	4	#6	7'-5"	4	#6	7'-5"	4
114"	#5	7'-5"	6	#5	7'-5"	6	#5	7'-5"	6	#5	7'-5"	6
120"	#7	7'-5"	4	#7	7'-5"	4	#7	7'-5"	4	#7	7'-5"	4
126"	#7	7'-5"	4	#7	7'-5"	4	#7	7'-5"	4	#7	7'-5"	4
132"	#7	7'-5"	4	#7	7'-5"	4	#7	7'-5"	4	#7	7'-5"	4
144"	#7	7'-5"	4	#7	7'-5"	4	#7	7'-5"	4	#7	7'-5"	4

See PLAN VIEW Detail, Sheet 1 of 2.

TABLE 2 (English)

D-LOAD	1000		1350		2000		3000	
Dia.	Diag. Bars		Diag. Bars		Diag. Bars		Diag. Bars	
	Size	No. 3 Req'd	Size	No. 3 Req'd	Size	No. 3 Req'd	Size	No. 3 Req'd
72"	#5	2	#5	2	#5	4	#5	4
78"	#5	2	#5	2	#5	4	#6	4
84"	#5	2	#4	4	#5	4	#6	4
90"	#5	2	#4	4	#5	4	#6	4
96"	#5	2	#4	4	#5	4	#7	4
102"	#4	4	#5	4	#6	4	#7	4
108"	#4	4	#5	4	#6	4	#7	4
114"	#4	4	#5	4	#6	4	#7	4
120"	#5	4	#5	4	#6	4	#6	6
126"	#5	4	#5	4	#6	4	#6	6
132"	#5	4	#5	4	#7	4	#7	6
144"	#5	4	#6	4	#7	4	#7	6

TABLE 1 (Metric)

D-LOAD	50			65			100			140		
Dia. (mm)	Longitudinal Bars			Longitudinal Bars			Longitudinal Bars			Longitudinal Bars		
	Size	Length (mm)	No. Req'd	Size	Length (mm)	No. Req'd	Size	Length (mm)	No. Req'd	Size	Length (mm)	No. Req'd
1800	#16M	2260	4	#16M	2260	4	#16M	2260	4	#16M	2260	4
1950	#19M	2260	4	#19M	2260	4	#19M	2260	4	#19M	2260	4
2100	#19M	2260	4	#19M	2260	4	#19M	2260	4	#19M	2260	4
2250	#19M	2260	4	#19M	2260	4	#19M	2260	4	#19M	2260	4
2400	#19M	2260	4	#19M	2260	4	#19M	2260	4	#19M	2260	4
2550	#19M	2260	4	#19M	2260	4	#19M	2260	4	#19M	2260	4
2700	#19M	2260	4	#19M	2260	4	#19M	2260	4	#19M	2260	4
2850	#16M	2260	6	#16M	2260	6	#16M	2260	6	#16M	2260	6
3000	#22M	2260	4	#22M	2260	4	#22M	2260	4	#22M	2260	4
3150	#22M	2260	4	#22M	2260	4	#22M	2260	4	#22M	2260	4
3300	#22M	2260	4	#22M	2260	4	#22M	2260	4	#22M	2260	4
3600	#22M	2260	4	#22M	2260	4	#22M	2260	4	#22M	2260	4

TABLE 2 (Metric)

D-LOAD	50		65		100		140	
Dia. (mm)	Diag. Bars		Diag. Bars		Diag. Bars		Diag. Bars	
	Size	No. 3 Req'd	Size	No. 3 Req'd	Size	No. 3 Req'd	Size	No. 3 Req'd
1800	#16M	2	#16M	2	#16M	4	#16M	4
1950	#16M	2	#16M	2	#16M	4	#19M	4
2100	#16M	2	#13M	4	#16M	4	#19M	4
2250	#16M	2	#13M	4	#16M	4	#19M	4
2400	#16M	2	#13M	4	#16M	4	#22M	4
2550	#13M	4	#16M	4	#19M	4	#22M	4
2700	#13M	4	#16M	4	#19M	4	#22M	4
2850	#13M	4	#16M	4	#19M	4	#22M	4
3000	#16M	4	#16M	4	#19M	4	#19M	6
3150	#16M	4	#16M	4	#19M	4	#19M	6
3300	#16M	4	#16M	4	#22M	4	#22M	6
3600	#16M	4	#19M	4	#22M	4	#22M	6

OHIO DEPARTMENT OF TRANSPORTATION

ENGINEER OF BRIDGES

DATE
7-20-01
7-19-02

HYDRAULIC ENGINEER
D. Gruver

All metric dimensions (in brackets [ ]) are in millimeters unless otherwise noted.

OFFICE OF STRUCTURAL ENGINEERING

STANDARD HYDRAULIC CONSTRUCTION DRAWING
MANHOLE No. 4

NUMBER
MH-2.1