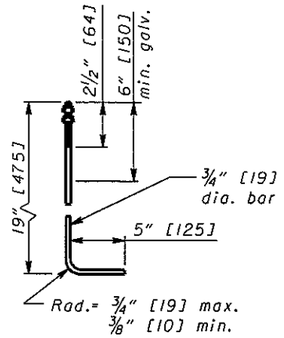

ANCHOR BOLT

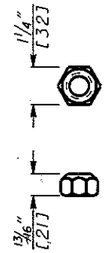

NUT

(ASTM A 325 and A 153)

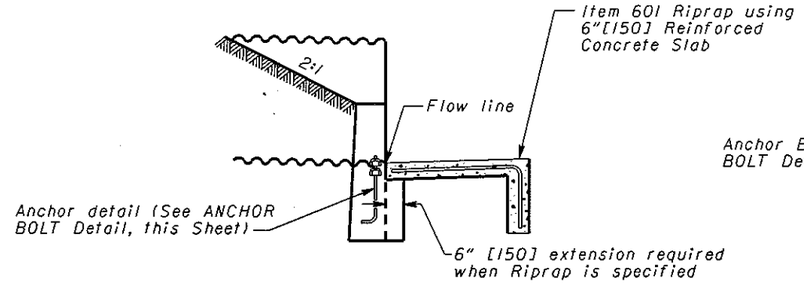

INLET CHANNEL PROTECTION DETAIL

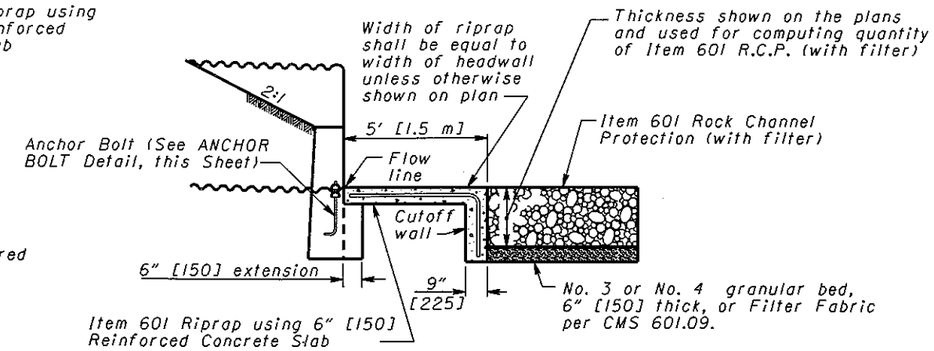

OUTLET CHANNEL PROTECTION DETAIL

The depth of the riprap cutoff wall (2'-6" [760] min.) shall match the thickness of the rock channel protection shown on the plan plus 6" [150].

CAST IN PLACE HW FOR CORRUGATED METAL PIPE & PLASTIC PIPE (Metric)

CIRCULAR					PIPE ARCH						PIPE ARCH					
D	W	H	T	CONC. m^3	SPAN	RISE	W	H	T	CONC. m^3	SPAN	RISE	W	H	T	CONC. m^3
300	600	925	300	0.16	68x13 mm Corrugations						*2025	1475	3750	1650	375	1.64
375	750	975	300	0.21	425	325	925	925	300	0.24	2175	1575	3950	1700	425	1.91
450	925	1000	300	0.25	525	375	1075	925	300	0.27	2450	1675	4275	1750	500	2.40
525	1075	1025	300	0.30	600	450	1225	975	300	0.33	2575	1775	4575	1800	550	2.71
600	1225	1075	300	0.35	700	500	1375	1000	300	0.37	2800	1875	4875	1850	600	3.03
675	1375	1125	300	0.41	875	600	1675	1050	300	0.47	2925	1975	5400	1900	625	3.74
750	1525	1150	300	0.46	1050	725	1975	1100	300	0.56	3200	2075	5475	1950	650	3.83
825	1675	1175	300	0.52	1225	825	2325	1150	300	0.69	3425	2175	5800	2000	675	4.17
900	1825	1225	300	0.58	1425	950	2750	1225	300	0.84	3550	2275	6325	2050	675	4.82
975	1975	1275	300	0.64	1600	1075	3050	1325	300	1.00	150x50 mm Corrugations (450 mm Corner Radius)					
1050	2125	1300	300	0.70	1775	1175	3350	1425	300	1.18						
1200	2450	1375	300	0.84	*1925	1300	3550	1600	300	1.41	*1825	1375	3550	1700	300	1.45
1350	2825	1450	300	1.02	*2075	1425	3750	1650	375	1.88	*1900	1425	3650	1725	350	1.62
1500	3200	1675	300	1.36	150x50 mm Corrugations (775 mm Corner Radius)						*2025	1475	3750	1750	375	1.85
1650	3575	1750	300	1.57							*2100	1525	3850	1775	400	1.87
1800	3950	1825	300	1.81	3975	2800	7300	2425	825	7.36	2175	1575	3925	1800	425	2.06
1950	4350	1900	350	2.25	4050	2850	7550	2450	825	7.74	2300	1625	4025	1825	450	2.12
2100	4725	1975	350	2.52	4200	2900	7575	2475	850	7.90	2375	1675	4275	1850	500	2.41
2250	5100	2050	400	3.06	4250	2950	7850	2500	850	8.31	2450	1725	4475	1875	525	2.64
2400	5475	2125	400	3.36	4325	3000	8100	2525	850	8.71	2575	1775	4575	1900	550	2.87
2550	5875	2200	450	4.04	4475	3050	8150	2550	875	8.93	2650	1825	4825	1925	575	3.17
2700	6250	2275	500	4.75	4600	3100	8200	2575	875	9.14	2800	1875	4875	1950	600	3.56
2850	6625	2350	550	5.54	4675	3150	8450	2600	875	9.56	2850	1925	5125	1975	650	3.77
3000	7000	2450	600	6.41	4750	3200	8700	2625	900	9.99	2925	1975	5400	2000	675	4.14
*3150	7000	2525	650	6.61	4875	3250	8750	2650	900	10.20	3075	2025	5425	2025	675	4.17
3300	7000	2600	700	7.06	4950	3300	9025	2675	900	10.66	3200	2075	5450	2050	675	4.27
3450	7350	2675	750	8.03	5100	3350	9050	2700	925	10.89	3275	2125	5750	2075	700	4.56
3600	7675	2750	825	9.09	5150	3400	9325	2725	925	11.35	3425	2175	5775	2100	700	4.68
3750	8025	2825	875	10.23	5225	3450	9575	2750	925	11.79	3475	2225	6025	2125	700	4.98
3900	8350	2900	925	11.48	5375	3500	9625	2775	950	12.10	3550	2275	6325	2150	725	5.31
4050	8700	2975	975	12.81	5425	3550	9875	2800	950	12.56	3700	2325	6350	2175	725	5.44
4200	9050	3050	1025	14.23	5575	3600	9900	2825	950	12.83	3750	2375	6600	2200	725	5.76
4350	9375	3125	1075	15.51	5625	3650	10 150	2850	975	13.33	3800	2425	6875	2225	750	6.08
4500	9725	3200	1100	16.72	5775	3700	10 175	2875	975	13.59	3850	2500	7200	2250	750	6.48
4650	10 050	3275	1125	18.00	5850	3750	10 500	2900	975	14.14	4025	2525	7200	2275	750	6.60
4800	10 425	3350	1150	19.34	5900	3800	10 750	2925	1000	14.67	4175	2575	7200	2300	775	6.74
4950	10 750	3425	1175	20.73	5975	3850	11 050	2950	1000	15.25	4225	2625	7650	2325	775	7.10
5100	11 075	3500	1200	22.29	6125	3900	11 050	2975	1000	15.52	4275	2675	7775	2350	775	7.48
5250	11 425	3575	1225	23.72	6175	3950	11 325	3000	1025	16.09	4450	2725	7775	2400	825	7.84
5400	11 750	3650	1250	25.56	75x25 mm Corrugations						4600	2775	7775	2425	825	7.84
5550	12 125	3725	1275	27.72	1000	775	1975	1100	300	0.54	4650	2825	8050	2450	825	8.21
5700	12 450	3800	1300	28.69	1150	900	2325	1150	300	0.65	4700	2875	8350	2475	850	8.62
5850	12 800	3875	1325	30.48	1325	1025	2750	1225	300	0.81	4750	2950	8650	2500	850	9.17
6000	13 125	3950	1350	32.33	1500	1150	3050	1325	300	0.97	4925	2975	8650	2525	850	9.24
6150	13 450	4050	1375	34.27	1650	1275	3350	1425	300	1.18	4975	3025	8950	2550	875	9.66
6300	13 825	4125	1400	36.27	*1825	1375	3550	1600	300	1.38	--	--	--	--	--	--

* Channel configuration for pipe sizes between end treatment "A" and end treatment "B" is determined by 2:1 slopes passing through a point 6" [150] below the top and at each side of the headwall. For end treatment "B", 2:1 slopes are tangent to pipe.

NOTES

GENERAL: If the pipe is depressed, a riprap reinforced concrete slab shall slope up to the channel bottom at a slope of 6 to 1 and terminate with a cutoff wall that has a depth of 6" [150] below the depression depth. Payment for the slab shall be made per square yard of **Item 601 Riprap using 6" Reinforced Concrete Slab** and shall include the cost of the cutoff wall. Reinforcing for the 6" reinforced concrete slab and cutoff wall shall be as shown on Standard Hydraulic Construction Drawing CB-3.1.

This drawing is for cast in place half-height concrete headwalls. When furnishing precast half-height headwalls, conform to pre-approved designs on file with the Office of Materials Management. Precast half-height headwalls are only approved for round conduits with a maximum conduit diameter of 78" [1950].

CONCRETE: Headwall concrete shall be Class C. Concrete quantities are based on headwalls without the 6" [150] extension under the channel protection.

ANCHOR BOLTS: Bolts (as detailed) for anchoring both ends of metal pipe shall meet ASTM A 307. The top 6" [150] min. of bolt shall be galvanized according to ASTM A 153. Cost of anchors shall be included in the unit price bid per Foot [Meter] of Item 603.

Headwall dimensions are based on end treatment "A" for pipe sizes up to and including 120" [3000], 71"x47" [1775x1175], and 66"x51" [1650x1275], and on end treatment "B" for sizes over and including 132" [3300], 13'-3"x9'-4" [3975x2800], and 7'-3"x5'-3" [2175x1575].

PLASTIC PIPE: Plastic pipe may not be available in all the sizes specified on this drawing.

See Sht. 1/2 for End Treatment "A," End Treatment "B," and English Pipe Table

OHIO DEPARTMENT OF TRANSPORTATION

STATE HYDRAULIC ENGINEER

DATE
7-20-01
7-19-02
7-15-05

HYDRAULIC ENGINEER
M. Wawszkiewicz

All metric dimensions (in brackets [ ]) are in millimeters unless otherwise noted.

OFFICE OF STRUCTURAL ENGINEERING

STANDARD HYDRAULIC CONSTRUCTION DRAWING

HALF-HEIGHT HEADWALLS FOR CORRUGATED METAL PIPE & PLASTIC PIPE

NUMBER
HW-2.1