HEADWALLS

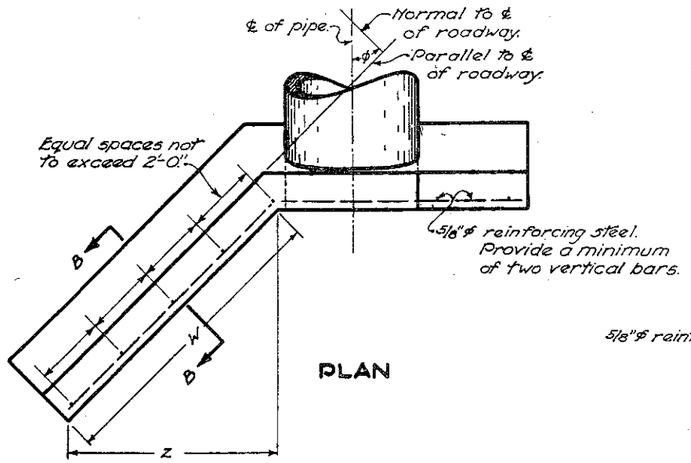

PLAN

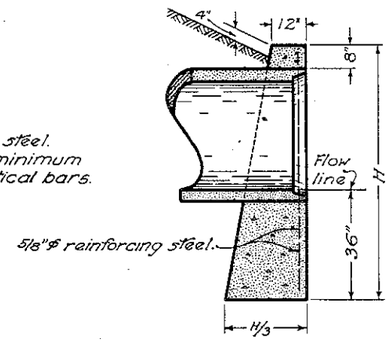

SECTION A-A

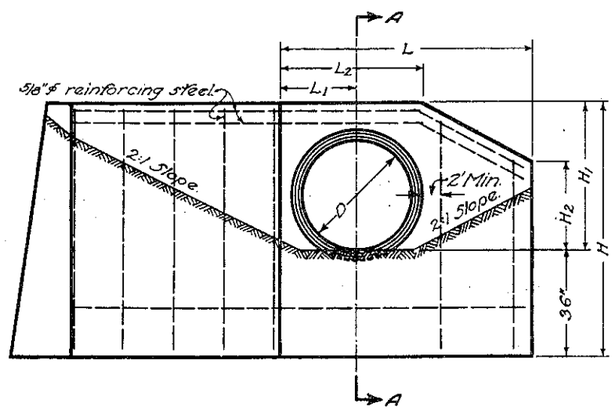

ELEVATION

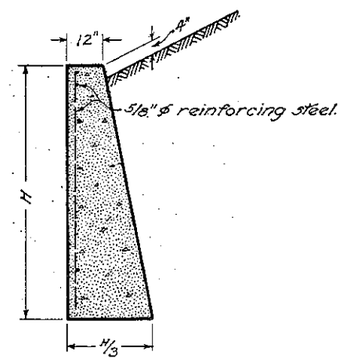

SECTION B-B

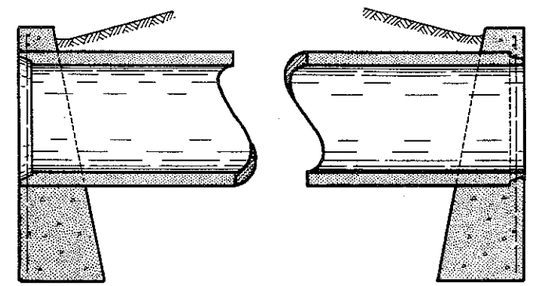

INLET END
GROOVE OR BELL UPSTREAM

OUTLET END
TONGUE OR SPIGOT DOWNSTREAM

RIGID PIPE

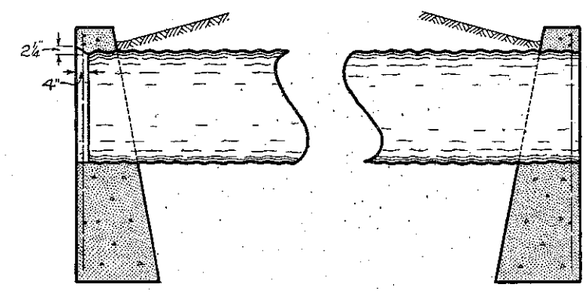

INLET END

OUTLET END

CORRUGATED PIPE

END TREATMENT AT HEADWALL

NOTES

Nº 2 HEADWALL where required will be provided for skewed culverts having a diameter or rise of 36 inches or less.

CONCRETE shall be Class "C."

REINFORCING STEEL BARS shall be 5/8 inch round.

DIMENSIONS AND QUANTITIES are shown for circular sections only. When used with reinforced elliptical concrete pipe or corrugated metal pipe arches it will be necessary to determine such dimensions and quantities which shall generally conform with those listed for the nearest size circular pipe. The dimensions established by vertical diameter shall apply to rise and the dimensions established by horizontal diameter shall apply to span.

Chamfer all exposed corners 3/4 of an inch.

FOUNDATION. Where the soil borings indicate a bearing capacity of less than 2600 pounds per square foot it will be necessary to increase the width of the footing.

	ϕ=15°										
	PIPE DIAM.	L	L_1	L_2	W	Z	H	H_1	H_2	CONC. C.Y.	STEEL LBS.
SLOPE 2:1	15"	2'-11"	0'-11"	1'-7"	2'-9"	2'-8"	5'-2"	2'-2"	1'-5"	1.4	41
	18"	3'-7"	1'-1"	1'-10"	3'-4"	3'-2"	5'-5"	2'-5"	1'-7"	1.8	46
	21"	4'-1"	1'-3"	2'-2"	3'-10"	3'-8"	5'-8"	2'-8"	1'-8"	2.2	50
	24"	4'-9"	1'-5"	2'-6"	4'-4"	4'-2"	5'-11"	2'-11"	1'-10"	2.7	61
	30"	5'-11"	1'-7"	2'-10"	5'-4"	5'-2"	6'-5"	3'-5"	2'-2"	3.8	76
	36"	7'-0"	1'-10"	3'-4"	6'-7"	6'-4"	7'-0"	4'-0"	2'-6"	5.4	87
SLOPE 4:1	15"	4'-1"	0'-11"	1'-7"	3'-3"	3'-2"	5'-2"	2'-2"	1'-10"	1.9	47
	18"	4'-10"	1'-1"	1'-10"	3'-10"	3'-8"	5'-5"	2'-5"	2'-0"	2.4	57
	21"	5'-8"	1'-3"	2'-2"	4'-4"	4'-2"	5'-8"	2'-8"	2'-3"	2.9	63
	24"	6'-5"	1'-5"	2'-6"	4'-10"	4'-8"	5'-11"	2'-11"	2'-6"	3.5	74
	30"	7'-9"	1'-7"	2'-10"	5'-10"	5'-8"	6'-5"	3'-5"	3'-0"	4.8	92
	36"	9'-3"	1'-10"	3'-4"	7'-1"	6'-10"	7'-0"	4'-0"	3'-5"	6.6	112

	ϕ=30°										
	PIPE DIAM.	L	L_1	L_2	W	Z	H	H_1	H_2	CONC. C.Y.	STEEL LBS.
SLOPE 2:1	15"	2'-11"	0'-11"	1'-7"	3'-1"	2'-8"	5'-2"	2'-2"	1'-5"	1.6	42
	18"	3'-7"	1'-1"	1'-10"	3'-8"	3'-2"	5'-5"	2'-5"	1'-7"	2.0	48
	21"	4'-1"	1'-3"	2'-2"	4'-3"	3'-8"	5'-8"	2'-8"	1'-8"	2.4	52
	24"	4'-9"	1'-5"	2'-6"	4'-10"	4'-2"	5'-11"	2'-11"	1'-10"	3.0	63
	30"	5'-11"	1'-7"	2'-10"	6'-0"	5'-2"	6'-5"	3'-5"	2'-2"	4.2	78
	36"	7'-0"	1'-10"	3'-4"	7'-4"	6'-4"	7'-0"	4'-0"	2'-6"	5.8	97
SLOPE 4:1	15"	3'-9"	0'-11"	1'-7"	3'-6"	3'-2"	5'-2"	2'-2"	1'-7"	1.9	47
	18"	4'-6"	1'-1"	1'-10"	4'-3"	3'-8"	5'-5"	2'-5"	1'-10"	2.4	57
	21"	5'-2"	1'-3"	2'-2"	4'-10"	4'-2"	5'-8"	2'-8"	2'-0"	3.0	68
	24"	5'-11"	1'-5"	2'-6"	5'-5"	4'-8"	5'-11"	2'-11"	2'-2"	3.6	74
	30"	7'-2"	1'-7"	2'-10"	6'-7"	5'-8"	6'-5"	3'-5"	2'-8"	4.9	92
	36"	8'-6"	1'-10"	3'-4"	7'-11"	6'-10"	7'-0"	4'-0"	3'-0"	6.7	111

	ϕ=45°										
	PIPE DIAM.	L	L_1	L_2	W	Z	H	H_1	H_2	CONC. C.Y.	STEEL LBS.
SLOPE 2:1	15"	2'-11"	0'-11"	1'-7"	3'-9"	2'-8"	5'-2"	2'-2"	1'-5"	1.8	44
	18"	3'-7"	1'-1"	1'-10"	4'-6"	3'-2"	5'-5"	2'-5"	1'-7"	2.3	56
	21"	4'-1"	1'-3"	2'-2"	5'-2"	3'-8"	5'-8"	2'-8"	1'-8"	2.8	61
	24"	4'-9"	1'-5"	2'-6"	5'-11"	4'-2"	5'-11"	2'-11"	1'-10"	3.4	67
	30"	5'-11"	1'-7"	2'-10"	7'-4"	5'-2"	6'-5"	3'-5"	2'-2"	4.8	90
	36"	7'-0"	1'-10"	3'-4"	8'-11"	6'-4"	7'-0"	4'-0"	2'-6"	6.6	110
SLOPE 4:1	15"	3'-7"	0'-11"	1'-7"	4'-6"	3'-2"	5'-2"	2'-2"	1'-5"	2.1	50
	18"	4'-2"	1'-1"	1'-10"	5'-2"	3'-8"	5'-5"	2'-5"	1'-7"	2.6	60
	21"	4'-10"	1'-3"	2'-2"	5'-11"	4'-2"	5'-8"	2'-8"	1'-9"	3.2	71
	24"	5'-6"	1'-5"	2'-6"	6'-7"	4'-8"	5'-11"	2'-11"	1'-11"	3.8	83
	30"	6'-8"	1'-7"	2'-10"	8'-0"	5'-8"	6'-5"	3'-5"	2'-4"	5.3	95
	36"	7'-11"	1'-10"	3'-4"	9'-8"	6'-10"	7'-0"	4'-0"	2'-7"	7.3	116

	ϕ=60°										
	PIPE DIAM.	L	L_1	L_2	W	Z	H	H_1	H_2	CONC. C.Y.	STEEL LBS.
SLOPE 2:1	15"	2'-11"	0'-11"	1'-7"	5'-4"	2'-8"	5'-2"	2'-2"	1'-5"	2.3	54
	18"	3'-7"	1'-1"	1'-10"	6'-4"	3'-2"	5'-5"	2'-5"	1'-7"	2.9	61
	21"	4'-1"	1'-3"	2'-2"	7'-4"	3'-8"	5'-8"	2'-8"	1'-8"	3.5	73
	24"	4'-9"	1'-5"	2'-6"	8'-4"	4'-2"	5'-11"	2'-11"	1'-10"	4.3	80
	30"	5'-11"	1'-7"	2'-10"	10'-4"	5'-2"	6'-5"	3'-5"	2'-2"	6.0	105
	36"	7'-0"	1'-10"	3'-4"	12'-8"	6'-4"	7'-0"	4'-0"	2'-6"	8.3	128
SLOPE 4:1	15"	3'-4"	0'-11"	1'-7"	6'-4"	3'-2"	5'-2"	2'-2"	1'-4"	2.6	59
	18"	3'-11"	1'-1"	1'-10"	7'-4"	3'-8"	5'-5"	2'-5"	1'-5"	3.3	70
	21"	4'-7"	1'-3"	2'-2"	8'-4"	4'-2"	5'-8"	2'-8"	1'-7"	4.0	77
	24"	5'-2"	1'-5"	2'-6"	9'-4"	4'-8"	5'-11"	2'-11"	1'-9"	4.7	95
	30"	6'-3"	1'-7"	2'-10"	11'-4"	5'-8"	6'-5"	3'-5"	2'-1"	6.5	116
	36"	7'-5"	1'-10"	3'-4"	13'-8"	6'-10"	7'-0"	4'-0"	2'-4"	8.9	139

BUREAU OF LOCATION AND DESIGN
OHIO DEPARTMENT OF HIGHWAYS

DATE 6-1-65

HEADWALLS

STANDARD CONSTRUCTION DRAWING **HW-2**

APPROVED R. R. Ridlon ENGR., L. & D.