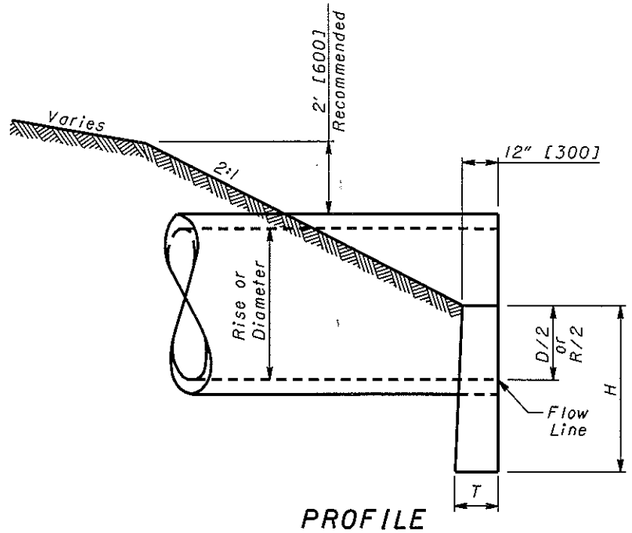

PROFILE

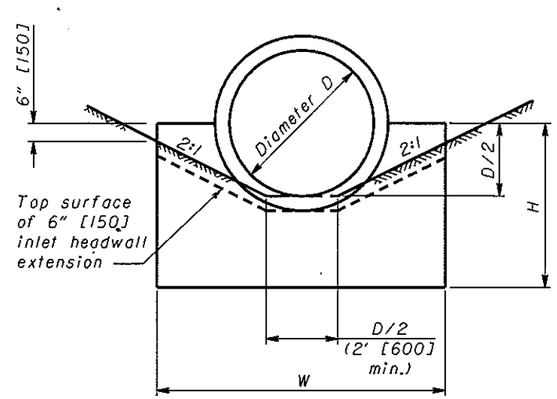

CIRCULAR

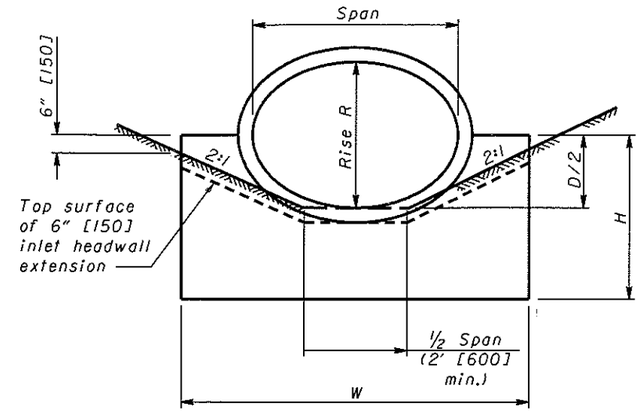

ELLIPTICAL

CONCRETE PIPE

See Sheet 2 of 2 for Pipe Tables and NOTES.

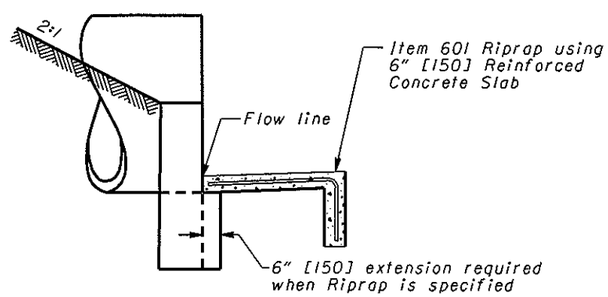

INLET CHANNEL PROTECTION DETAIL

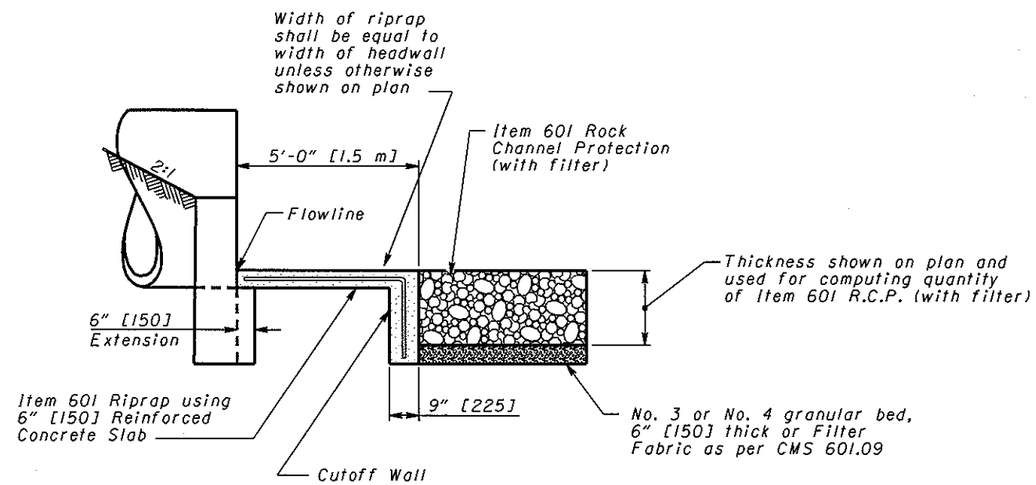

OUTLET CHANNEL PROTECTION DETAIL

The depth of the riprap cutoff wall (2'-6" [750] min.) shall match the thickness of the rock channel proctection shown on the plan plus 6" [150].

OHIO DEPARTMENT OF TRANSPORTATION

STATE HYDRAULIC ENGINEER

DATE
7-20-01
7-19-02
7-15-05

HYDRAULIC ENGINEER
M. Wowszkiewicz

All metric dimensions (in brackets [ ]) are in millimeters unless otherwise noted.

OFFICE OF STRUCTURAL ENGINEERING

STANDARD HYDRAULIC-CONSTRUCTION DRAWING

HALF-HEIGHT HEADWALLS FOR CONCRETE PIPE

NUMBER
HW-2.2