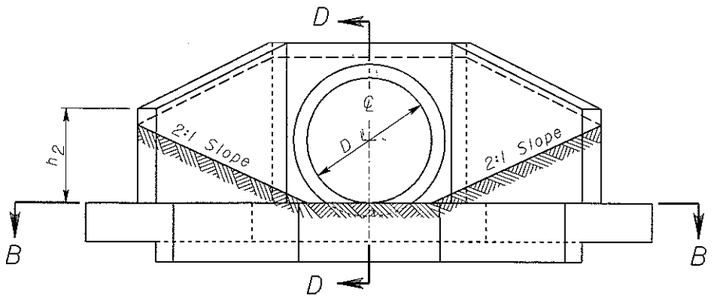

ELEVATION

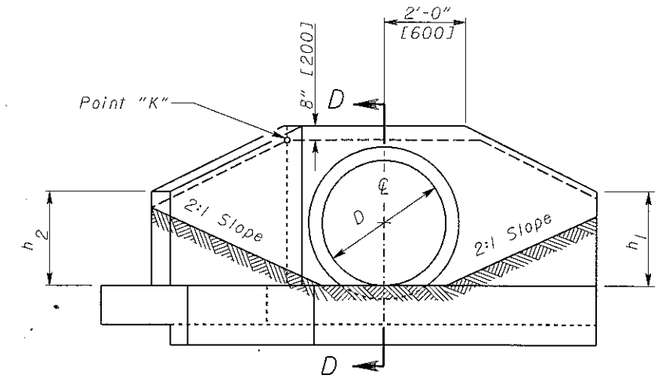

ELEVATION

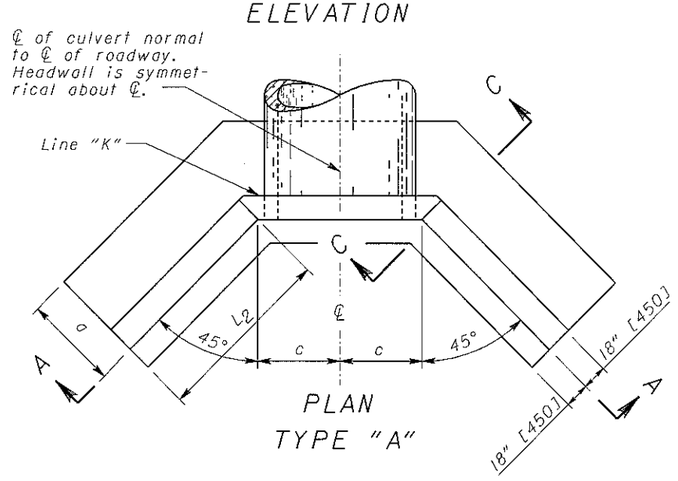

PLAN
TYPE "A"

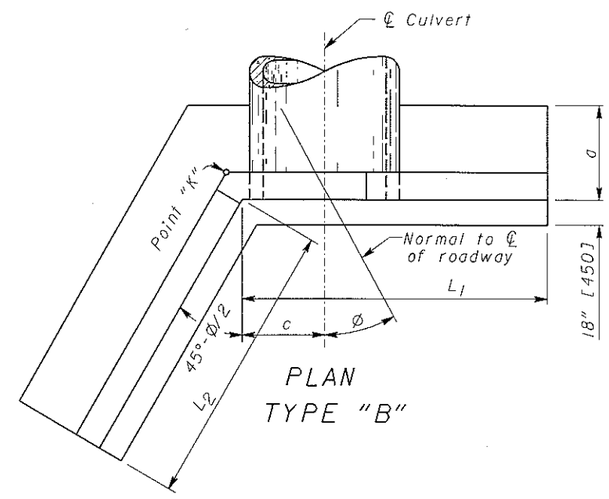

PLAN
TYPE "B"

NOTES

APPLICATION: Full-Height Headwalls shall be provided for skewed and non-skewed culverts having a diameter or rise of 42" [1050] to 84" [2100] inclusive. Type "A" is used when the skew angle (Ø) is ten degrees or less and Type "B" when the skew angle is over ten degrees.

CONCRETE: Concrete shall be Class C.

REINFORCING STEEL: Bars shall be #5 [#16M] and epoxy coated.

DETAILS AND QUANTITIES: Are shown for circular sections only. When used with reinforced elliptical concrete pipe or corrugated metal pipe arches, it will be necessary to adjust dimensions and quantities to conform to those listed for the nearerst size circular pipe. The dimensions established by vertical diameter shall apply to rise, and dimensions established by horizontal diameter shall apply to span. All calculated dimensions shall be rounded to the nearest 1" [25]. Chamfer all exposed corners ¾" [19].

FOUNDATION: Where the soil borings indicate a bearing capacity of less than 2,600 pounds per square foot [125 kPa], it will be necessary to increase the width of the footing.

HEADWALL LOCATION: To be determined by the intersection of the embankment slope at the back of the headwall at Point "K". The slopes adjacent to the headwall shall be 2:1.

PAYMENT: Item 602 Concrete Masonry includes reinforcing.

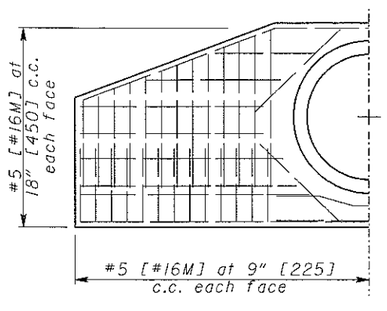

HALF-SECTION A-A

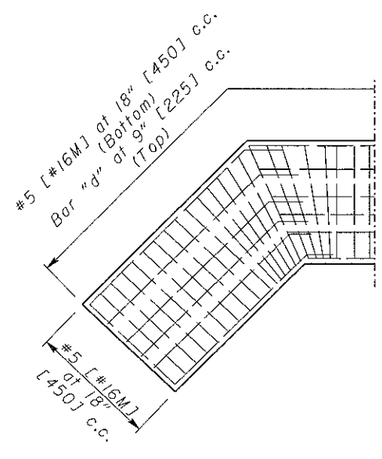

HALF-SECTION B-B

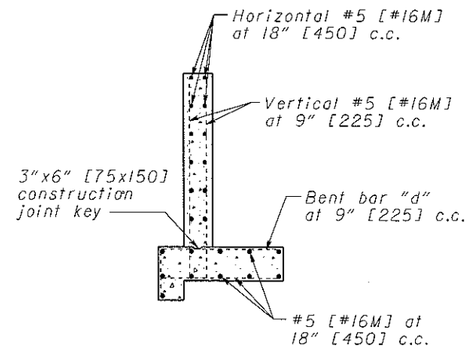

SECTION C-C

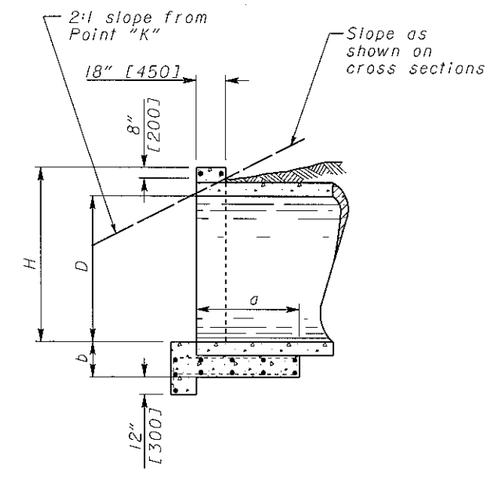

SECTION D-D

OHIO DEPARTMENT OF TRANSPORTATION	
STATE HYDRAULIC ENGINEER	DATE 1-21-05
REVISIONS	1-21-05
HYDR. ENGR. J. Syar	DRAWN D. Focke
All metric dimensions [in brackets []] are in millimeters unless otherwise noted.	
OFFICE OF STRUCTURAL ENGINEERING	
STANDARD HYDRAULIC CONSTRUCTION DRAWING	FULL-HEIGHT HEADWALLS
NUMBER	HW-1.1
1 / 2	