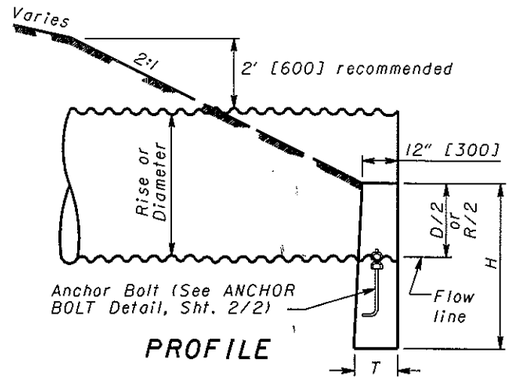

PROFILE

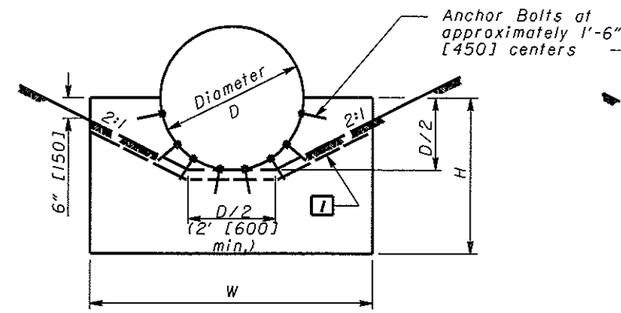

CIRCULAR

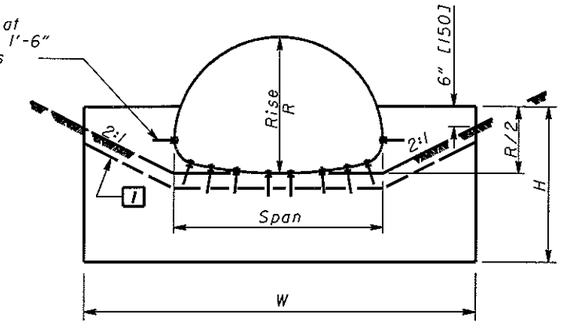

PIPE-ARCH

END TREATMENT "A"

CAST IN PLACE HW FOR CORRUGATED METAL PIPE & PLASTIC PIPE (English)

CIRCULAR					PIPE ARCH						PIPE ARCH					
D	W	H	T	CONC. cu. yds.	SPAN	RISE	W	H	T	CONC. cu. yds.	SPAN	RISE	W	H	T	CONC. cu. yds.
12"	2'-0"	3'-0"	12"	0.21	2.67"x½" Corrugations						*81"	59"	12'-4"	5'-5"	15"	2.14
15"	2'-6"	3'-2"	12"	0.27	17"	13"	3'-0"	3'-0"	12"	0.31	87"	63"	13'-0"	5'-7"	17"	2.50
18"	3'-0"	3'-3"	12"	0.33	21"	15"	3'-6"	3'-0"	12"	0.35	95"	67"	14'-0"	5'-9"	20"	3.14
21"	3'-6"	3'-4"	12"	0.39	24"	18"	4'-0"	3'-2"	12"	0.43	103"	71"	15'-0"	5'-11"	22"	3.54
24"	4'-0"	3'-6"	12"	0.46	28"	20"	4'-6"	3'-3"	12"	0.48	112"	75"	16'-0"	6'-1"	24"	3.96
27"	4'-6"	3'-8"	12"	0.53	35"	24"	5'-6"	3'-5"	12"	0.61	117"	79"	17'-9"	6'-3"	25"	4.89
30"	5'-0"	3'-9"	12"	0.60	42"	29"	6'-6"	3'-7"	12"	0.73	128"	83"	18'-0"	6'-5"	26"	5.01
33"	5'-6"	3'-10"	12"	0.68	49"	33"	7'-8"	3'-9"	12"	0.90	137"	87"	19'-0"	6'-7"	27"	5.45
36"	6'-0"	4'-0"	12"	0.76	57"	38"	9'-0"	4'-0"	12"	1.10	142"	91"	20'-9"	6'-9"	27"	6.31
39"	6'-6"	4'-2"	12"	0.84	64"	43"	10'-0"	4'-4"	12"	1.31	6"x2" Corrugations (18" Corner Radius)					
42"	7'-0"	4'-3"	12"	0.92	71"	47"	11'-0"	4'-8"	12"	1.54						
48"	8'-0"	4'-6"	12"	1.10	*77"	52"	11'-8"	5'-3"	12"	1.84	*6'-1"	4'-7"	11'-8"	5'-7"	12"	1.89
54"	9'-3"	4'-9"	12"	1.33	*83"	57"	12'-4"	5'-5"	15"	2.46	*6'-4"	4'-9"	12'-0"	5'-8"	14"	2.12
60"	10'-6"	5'-6"	12"	1.78	6"x2" Corrugations (31" Corner Radius)						*6'-9"	4'-11"	12'-4"	5'-9"	15"	2.42
66"	11'-9"	5'-9"	12"	2.06							*7'-0"	5'-1"	12'-8"	5'-10"	16"	2.44
72"	13'-0"	6'-0"	12"	2.37	13'-3"	9'-4"	23'-11"	7'-11"	32"	9.63	7'-3"	5'-3"	12'-11"	5'-11"	17"	2.69
78"	14'-3"	6'-3"	14"	2.94	13'-6"	9'-6"	24'-9"	8'-0"	32"	10.12	7'-8"	5'-5"	13'-2"	6'-0"	18"	2.77
84"	15'-6"	6'-6"	14"	3.30	14'-0"	9'-8"	24'-10"	8'-1"	33"	10.33	7'-11"	5'-7"	14'-0"	6'-1"	20"	3.15
90"	16'-9"	6'-9"	16"	4.00	14'-2"	9'-10"	25'-9"	8'-2"	33"	10.87	8'-2"	5'-9"	14'-8"	6'-2"	21"	3.45
96"	18'-0"	7'-0"	16"	4.40	14'-5"	10'-0"	26'-7"	8'-3"	33"	11.39	8'-7"	5'-11"	15'-0"	6'-3"	22"	3.75
102"	19'-3"	7'-3"	18"	5.28	14'-11"	10'-2"	26'-9"	8'-4"	34"	11.68	8'-10"	6'-1"	15'-10"	6'-4"	23"	4.15
108"	20'-6"	7'-6"	20"	6.21	15'-4"	10'-4"	26'-11"	8'-5"	34"	11.96	9'-4"	6'-3"	16'-0"	6'-5"	24"	4.65
114"	21'-9"	7'-9"	22"	7.25	15'-7"	10'-6"	27'-9"	8'-6"	34"	12.51	9'-6"	6'-5"	16'-10"	6'-6"	26"	4.93
120"	23'-0"	8'-0"	24"	8.38	15'-10"	10'-8"	28'-7"	8'-7"	35"	13.06	9'-9"	6'-7"	17'-9"	6'-7"	27"	5.41
*126"	23'-0"	8'-3"	26"	8.64	16'-3"	10'-10"	28'-8"	8'-8"	35"	13.34	10'-3"	6'-9"	17'-10"	6'-8"	27"	5.45
132"	23'-0"	8'-6"	28"	9.23	16'-6"	11'-0"	29'-7"	8'-9"	35"	13.94	10'-8"	6'-11"	17'-11"	6'-9"	27"	5.59
138"	24'-1"	8'-9"	30"	10.50	17'-0"	11'-2"	29'-8"	8'-10"	36"	14.24	10'-11"	7'-1"	18'-10"	6'-10"	28"	5.97
144"	25'-2"	9'-0"	32"	11.89	17'-2"	11'-4"	30'-7"	8'-11"	36"	14.84	11'-5"	7'-3"	18'-11"	6'-11"	28"	6.12
150"	26'-4"	9'-3"	34"	13.38	17'-5"	11'-6"	31'-5"	9'-0"	36"	15.42	11'-7"	7'-5"	19'-9"	7'-0"	28"	6.52
156"	27'-5"	9'-6"	36"	15.01	17'-11"	11'-8"	31'-7"	9'-1"	37"	15.83	11'-10"	7'-7"	20'-9"	7'-1"	29"	6.94
162"	28'-7"	9'-9"	38"	16.75	18'-1"	11'-10"	32'-5"	9'-2"	37"	16.43	12'-4"	7'-9"	20'-10"	7'-2"	29"	7.12
168"	29'-8"	10'-0"	40"	18.61	18'-7"	12'-0"	32'-6"	9'-3"	37"	16.78	12'-6"	7'-11"	21'-8"	7'-3"	29"	7.53
174"	30'-9"	10'-3"	42"	20.28	18'-9"	12'-2"	33'-4"	9'-4"	38"	17.43	12'-8"	8'-1"	22'-7"	7'-4"	30"	7.95
180"	31'-11"	10'-6"	43"	21.87	19'-3"	12'-4"	33'-5"	9'-5"	38"	17.78	12'-10"	8'-4"	23'-7"	7'-5"	30"	8.48
186"	33'-0"	10'-9"	44"	23.54	19'-6"	12'-6"	34'-5"	9'-6"	38"	18.49	13'-5"	8'-5"	23'-7"	7'-6"	30"	8.63
192"	34'-2"	11'-0"	45"	25.30	19'-8"	12'-8"	35'-3"	9'-7"	39"	19.19	13'-11"	8'-7"	23'-7"	7'-7"	31"	8.81
198"	35'-3"	11'-3"	46"	27.12	19'-11"	12'-10"	36'-3"	9'-8"	39"	19.95	14'-1"	8'-9"	25'-1"	7'-8"	31"	9.29
204"	36'-4"	11'-6"	47"	29.15	20'-5"	13'-0"	36'-3"	9'-9"	39"	20.30	14'-3"	8'-11"	25'-6"	7'-9"	31"	9.78
210"	37'-6"	11'-9"	48"	31.03	20'-7"	13'-2"	37'-2"	9'-10"	40"	21.05	14'-10"	9'-1"	25'-6"	7'-10"	32"	10.25
216"	38'-7"	12'-0"	49"	33.43	3"x1" Corrugations						15'-4"	9'-3"	25'-6"	7'-11"	32"	10.25
222"	39'-9"	12'-3"	50"	36.26	40"	31"	6'-6"	3'-7"	12"	0.70	15'-6"	9'-5"	26'-5"	8'-0"	32"	10.74
228"	40'-10"	12'-6"	51"	37.52	46"	36"	7'-8"	3'-9"	12"	0.85	15'-8"	9'-7"	27'-5"	8'-1"	33"	11.28
234"	42'-0"	12'-9"	52"	39.86	53"	41"	9'-0"	4'-0"	12"	1.06	15'-10"	9'-10"	28'-5"	8'-2"	33"	12.00
240"	43'-1"	13'-0"	53"	42.28	60"	46"	10'-0"	4'-4"	12"	1.27	16'-5"	9'-11"	28'-5"	8'-3"	33"	12.09
246"	44'-2"	13'-3"	54"	44.83	66"	51"	11'-0"	4'-8"	12"	1.54	16'-7"	10'-1"	29'-4"	8'-4"	34"	12.64
252"	45'-4"	13'-6"	55"	47.44	*73"	55"	11'-8"	5'-3"	12"	1.81	--	--	--	--	--	--

* Channel configuration for pipe sizes between end treatment "A" and end treatment "B" is determined by 2:1 slopes passing through a point 6" [150] below the top and at each side of the headwall. For end treatment "B", 2:1 slopes are tangent to pipe.

1 Top surface of 6" [150] inlet headwall extension

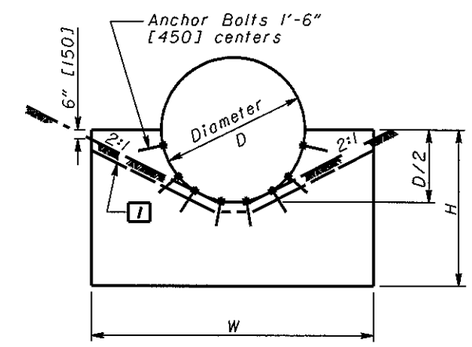

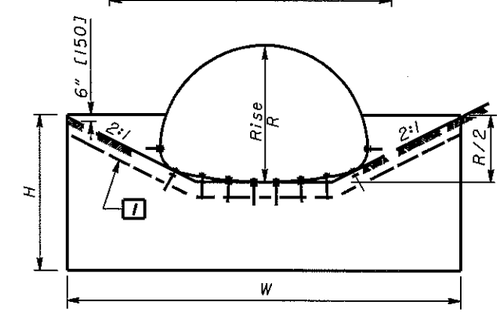

END TREATMENT "B"

See Sht. 2/2 for NOTES and Metric Pipe Table

OHIO DEPARTMENT OF TRANSPORTATION

STATE HYDRAULIC ENGINEER

DATE
7-20-01
7-19-02
7-15-05

HYDRAULIC ENGINEER M. Wowszkiewicz

All metric dimensions (in brackets [ ]) are in millimeters unless otherwise noted.

OFFICE OF STRUCTURAL ENGINEERING

STANDARD HYDRAULIC CONSTRUCTION DRAWING

HALF-HEIGHT HEADWALLS FOR CORRUGATED METAL PIPE & PLASTIC PIPE

NUMBER HW-2.1

1/2