HEADWALLS

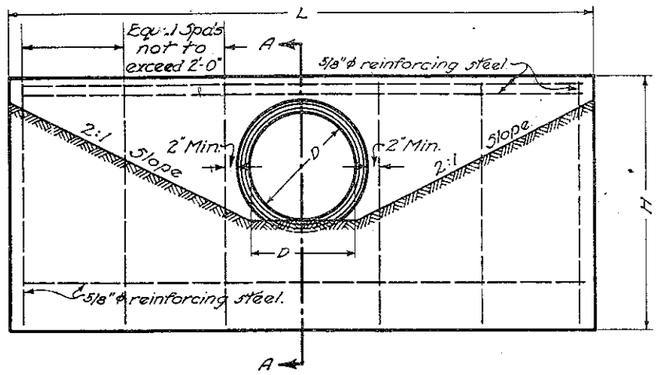

ELEVATION

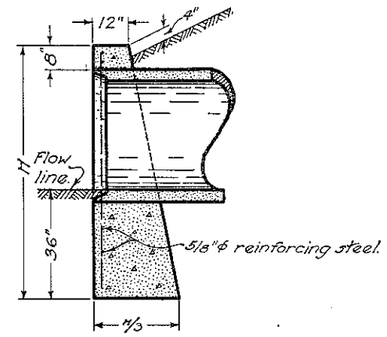

SECTION A-A

STANDARD Nº 1 HEADWALL

NOTES

Nº 1 HEADWALL where required will be provided for nonskewed culverts having a diameter or rise of 36 inches or less.

CONCRETE shall be Class "C".

REINFORCING STEEL BARS shall be 5/8 inch round.

DIMENSIONS AND QUANTITIES are shown for circular sections only. It will be necessary to determine dimensions for the Nº 1 headwall required for reinforced elliptical concrete pipe or corrugated metal pipe arches in accordance with the equations listed on this drawing.

Chamfer all exposed corners 3/4 of an inch.

FOUNDATION. Where the soil borings indicate a bearing capacity of less than 2600 pounds per square foot, it will be necessary to increase the width of the base.

DIMENSIONS			QUANTITIES ONE HEADWALL	
DIAMETER	H	L	CONCRETE CU. YDS.	REINFORCING STEEL LBS.
15"	5'-2"	7'-0"	1.7	41
18"	5'-5"	8'-4"	2.2	57
21"	5'-8"	9'-8"	2.8	62
24"	5'-11"	11'-0"	3.3	69
30"	6'-5"	13'-8"	4.7	92
36"	7'-0"	16'-4"	6.5	105

L CIRCULAR SECTIONS = 5D + 4t
L ELLIPTICAL OR PIPE-ARCH = 4R + 4t + S
H CIRCULAR SECTIONS = D + t + 44"
H ELLIPTICAL OR PIPE-ARCH = R + t + 44"
D = DIAMETER OF PIPE
R = RISE OF PIPE
S = SPAN OF PIPE
t = THICKNESS OF BARREL
L = LENGTH OF HEADWALL
H = HEIGHT OF HEADWALL

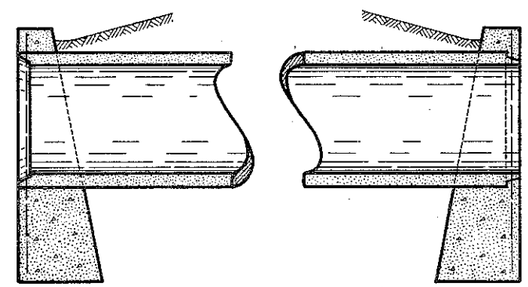

INLET END
GROOVE OR BELL UPSTREAM

OUTLET END
TONGUE OR SPIGOT DOWNSTREAM

RIGID PIPE

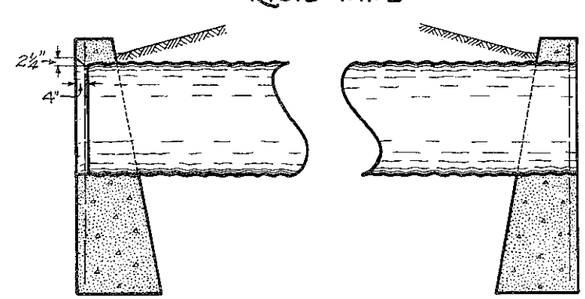

INLET END

OUTLET END

CORRUGATED PIPE

END TREATMENT AT HEADWALL

BUREAU OF LOCATION AND DESIGN
OHIO DEPARTMENT OF HIGHWAYS

DATE 6-1-65

HEADWALLS

STANDARD CONSTRUCTION DRAWING HW-1

APPROVED R. R. Rutter ENGR. L. & D.