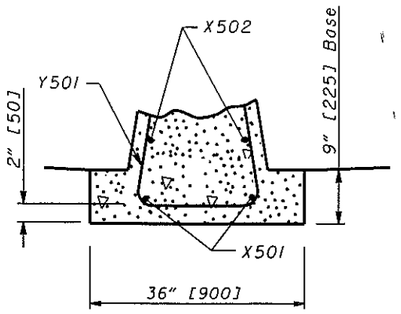

PARTIAL SECTION B-B

See Sheet 1

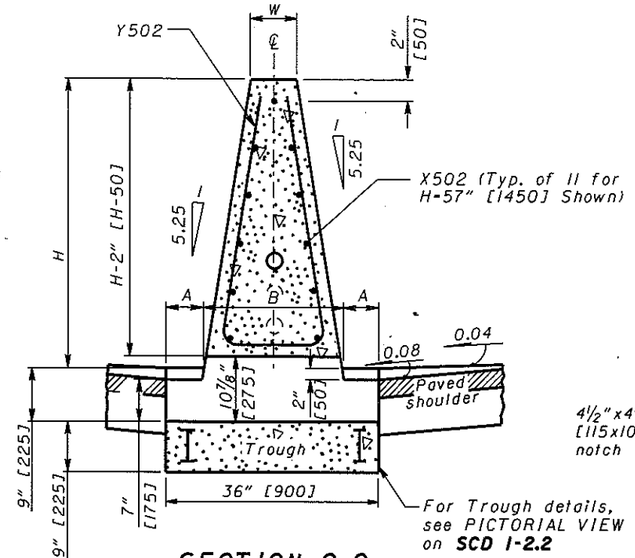

SECTION C-C

See Standard Inlet Types on first sheet for dimensions A, B, H and W.

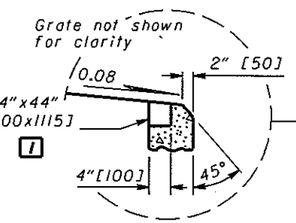

ALTERNATE SPILLWAY DETAIL

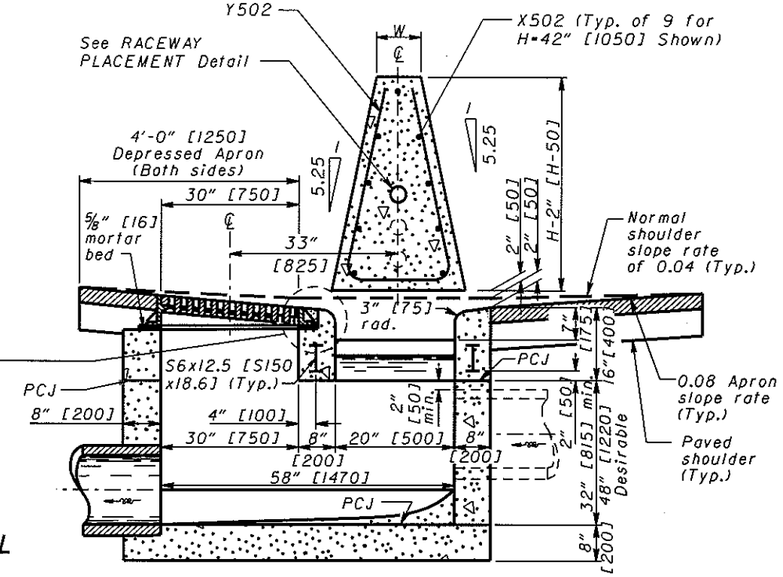

SECTION D-D

See Sheet 1

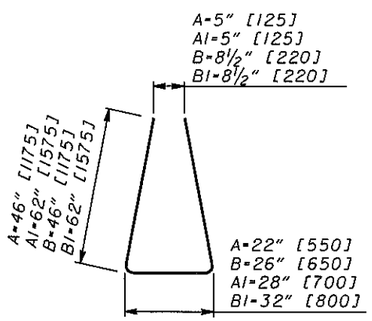

Y501

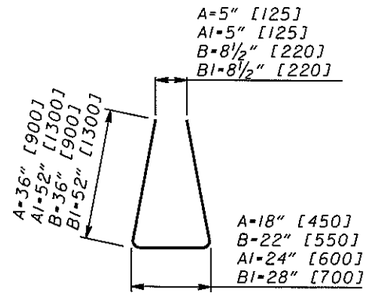

Y502

BENDING DIAGRAMS

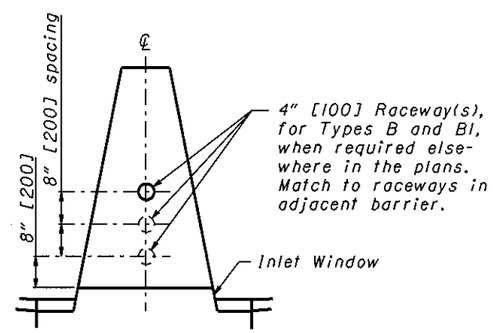

RACEWAY PLACEMENT

(Over Inlet Window)

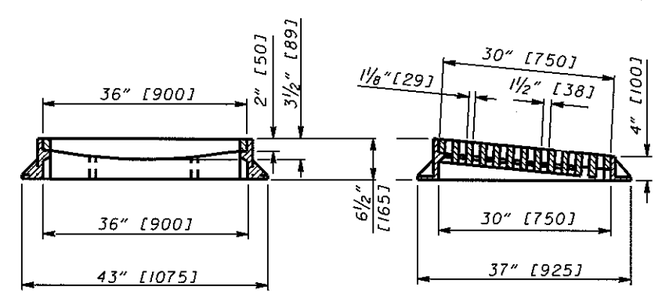

CASTING DETAILS

STEEL LIST (For Estimating Purposes Only)

INLET NO. 3	X501 #5 [#16M] Straight		X502 #5 [#16M] Straight		Y501 #5 [#16M] Bent		Y502 #5 [#16M] Bent		S6x12.5 [S150x18.6]	
	No.	Length	No.	Length	No.	Length	No.	Length	No.	Length
Type A	4	4'-8" [1400]	9	19'-8" [5900]	8	9'-3" [2810]	5	7'-3" [2200]	2	11'-0" [3300]
Type A1	4	4'-8" [1400]	11	19'-8" [5900]	8	12'-3" [3730]	5	10'-3" [3120]	2	11'-0" [3300]
Type B	4	4'-8" [1400]	9	19'-8" [5900]	8	9'-9" [2970]	5	7'-9" [2360]	2	11'-0" [3300]
Type B1	4	4'-8" [1400]	11	19'-8" [5900]	8	12'-9" [3880]	5	10'-9" [3270]	2	11'-0" [3300]

For Std. Inlet Types, NOTES, LEGEND, Plan and Section A-A, see Sheet 1.

OHIO DEPARTMENT OF TRANSPORTATION

STATE HYDRAULIC ENGINEER

DATE
7-16-04
7-15-05

HYDRAULIC ENGINEER
W. Wowszlewicz

All metric dimensions [in brackets []] are in millimeters unless otherwise noted.

OFFICE OF STRUCTURAL ENGINEERING

STANDARD HYDRAULIC CONSTRUCTION DRAWING

INLET No. 3 FOR SINGLE SLOPE BARRIER, TYPES A, A1, B & B1

NUMBER 1-2.1