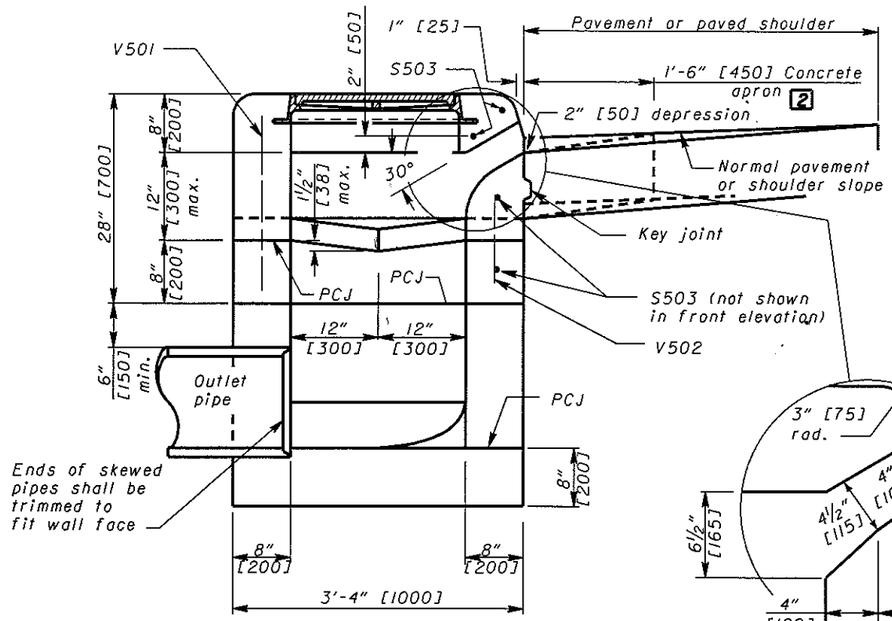

SECTION A-A
(See Sht. 1/2.)

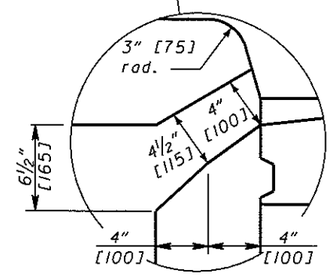

ALTERNATE OPENING

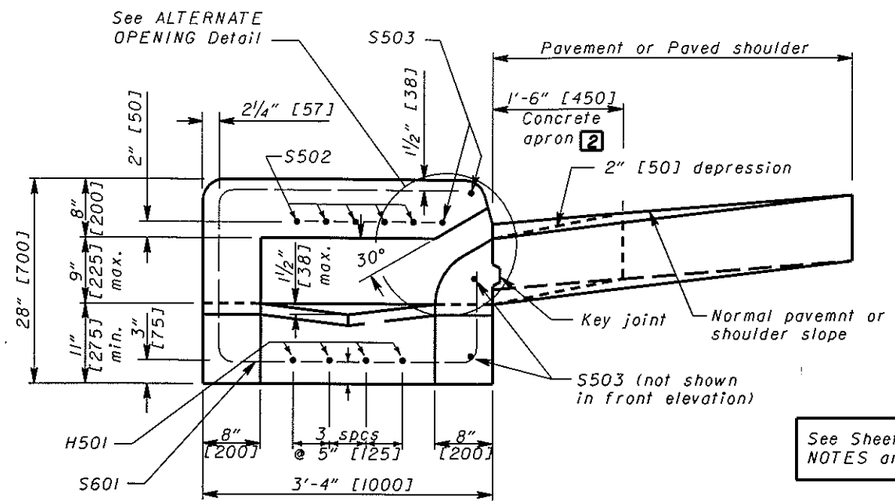

SECTION B-B
(See Sht. 1/2.)

See Sheet 1 of 2 for NOTES and LEGEND

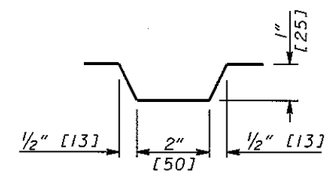

KEY JOINT

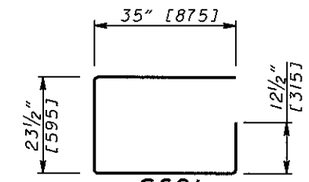

S601
#6 [#19M] ROUND BAR
BENDING DIAGRAM

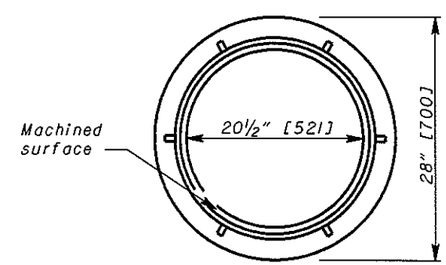

PLAN OF FRAME

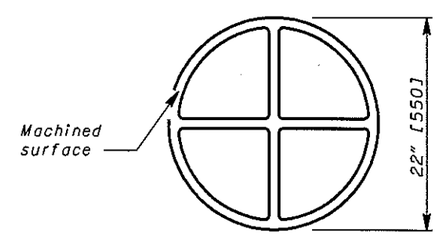

BOTTOM PLAN OF COVER

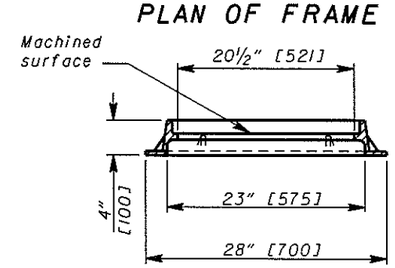

FRAME SECTION

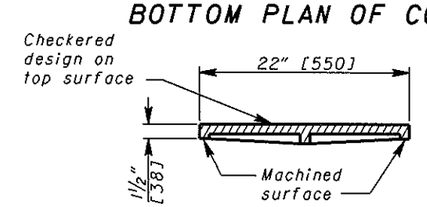

COVER SECTION

MANHOLE FRAME

MANHOLE COVER

CONCRETE AND REINFORCING QUANTITIES (English)

INLET LENGTH	CONCRETE (cu. yds.)	Reinforcing S601 #6 bar		S501 #5 bar		S502 #5 bar		S503 #5 bar		H501 #5 bar		V501 #5 bar		V502 #5 bar		Weight (lbs.)
		No.	Length	No.	Length	No.	Length	No.	Length	No.	Length	No.	Length	No.	Length	
6'	2.4	5	8'-10"	4	2'-11"	5	4'-4"	4	7'-0"	4	3'-8"	4	2'-0"	2	1'-0"	156
8'	2.8	9	8'-10"	4	2'-11"	5	6'-4"	4	9'-0"	4	5'-8"	4	2'-0"	2	1'-0"	236
10'	3.2	13	8'-10"	4	2'-11"	5	8'-4"	4	11'-0"	4	7'-8"	4	2'-0"	2	1'-0"	316
12'	3.6	17	8'-10"	4	2'-11"	5	10'-4"	4	13'-0"	4	9'-8"	4	2'-0"	2	1'-0"	397
14'	3.8	21	8'-10"	4	2'-11"	5	12'-4"	4	15'-0"	4	11'-8"	4	2'-0"	2	1'-0"	477
16'	4.4	25	8'-10"	4	2'-11"	5	14'-4"	4	17'-0"	4	13'-8"	4	2'-0"	2	1'-0"	557
18'	4.8	29	8'-10"	4	2'-11"	5	16'-4"	4	19'-0"	4	15'-8"	4	2'-0"	2	1'-0"	636
20'	5.2	33	8'-10"	4	2'-11"	5	18'-4"	4	21'-0"	4	17'-8"	4	2'-0"	2	1'-0"	717

CONCRETE AND REINFORCING QUANTITIES (Metric)

INLET LENGTH (m)	CONCRETE (m^3)	Reinforcing S601 #19M		S501 #16M		S502 #16M		S503 #16M		H501 #16M		V501 #16M		V502 #16M		Mass (kg)
		No.	Length (mm)	No.	Length (mm)	No.	Length (mm)	No.	Length (mm)	No.	Length (mm)	No.	Length (mm)	No.	Length (mm)	
1.8	1.8	5	2660	4	865	5	1300	4	2100	4	1100	4	610	2	300	72
2.4	2.1	9	2660	4	865	5	1900	4	2700	4	1700	4	610	2	300	109
3.0	2.4	13	2660	4	865	5	2500	4	3300	4	2300	4	610	2	300	146
3.6	2.8	17	2660	4	865	5	3100	4	3900	4	2900	4	610	2	300	184
4.2	3.1	21	2660	4	865	5	3700	4	4500	4	3500	4	610	2	300	221
4.8	3.4	25	2660	4	865	5	4300	4	5100	4	4100	4	610	2	300	258
5.4	3.7	29	2660	4	865	5	4900	4	5700	4	4700	4	610	2	300	296
6.0	4.0	33	2660	4	865	5	5500	4	6300	4	5300	4	610	2	300	333

Note: The above table of quantities is included with this drawing for estimating purposes only. The cost of furnishing and placing all concrete, reinforcing steel, casting, etc., shall be included in Item 604 for payment. All straight bars are #5 [#16M].

OHIO DEPARTMENT OF TRANSPORTATION

STATE HYDRAULIC ENGINEER

DATE
7-20-01
7-19-02
7-15-05

HYDRAULIC ENGINEER
W. Wowszkiewicz

All metric dimensions (in brackets [ ]) are in millimeters unless otherwise noted.

OFFICE OF STRUCTURAL ENGINEERING

STANDARD HYDRAULIC CONSTRUCTION DRAWING

PAVEMENT INLET No. 2A

NUMBER
1-1.2

2/2