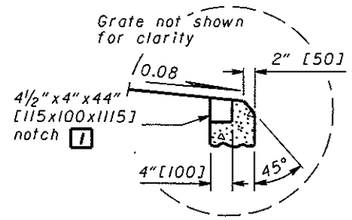

ALTERNATE SPILLWAY DETAIL

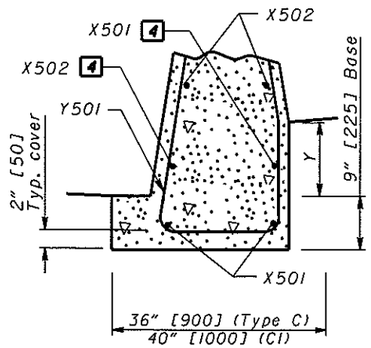

PARTIAL SECTION B-B

See Sheet 1

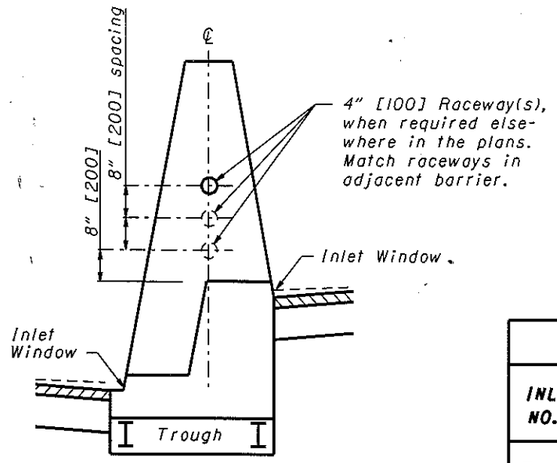

RACEWAY PLACEMENT

(Over Inlet Window)

For Standard Inlet Types, NOTES, LEGEND, Plan View and Section A-A, see Sheet 1.

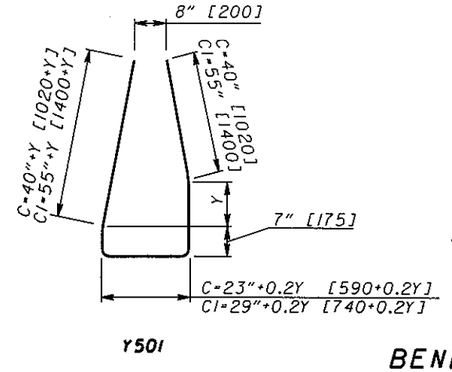

Y501

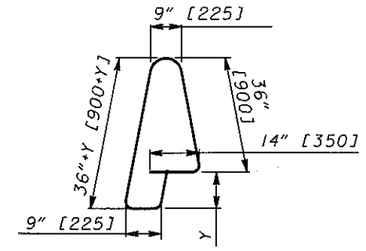

Y502
For Type C

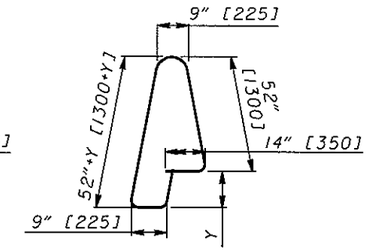

Y502
For Type CI

BENDING DIAGRAMS

STEEL LIST

(For Estimating Purposes Only)

INLET NO. 3	X501 4 #5 [16M] Straight		X502 4 #5 [16M] Straight		X503 4 #5 [16M] Straight		Y501 #5 [16M] Bent		Y502 #5 [16M] Bent		S6x12.5 [S150x18.6]	
	No.	Length	No.	Length	No.	Length	No.	Length	No.	Length	No.	Length
Type C	Varies 4 to 8	4'-8" [1400]	Varies 9 to 11	19'-8" [6000]	Varies 1 to 3	12'-0" [3600]	8	Varies 9'-6" [2900] to 13'-11" [4230]	5	Varies 8'-0" [2440] to 12'-0" [3640]	2	11'-0" [3300]
Type CI	Varies 4 to 8	4'-8" [1400]	Varies 11 to 13	19'-8" [6000]	Varies 1 to 3	12'-0" [3600]	8	Varies 12'-6" [3810] to 16'-11" [5140]	5	Varies 10'-6" [3210] to 14'-6" [4410]	2	11'-0" [3300]

For Trough Details, see PICTORIAL VIEW on **SCD 1-2.2.**

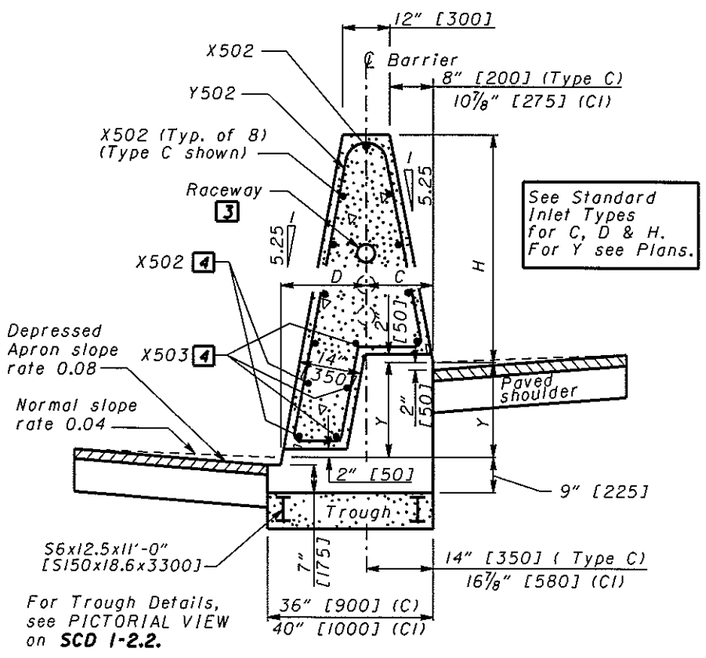

SECTION C-C

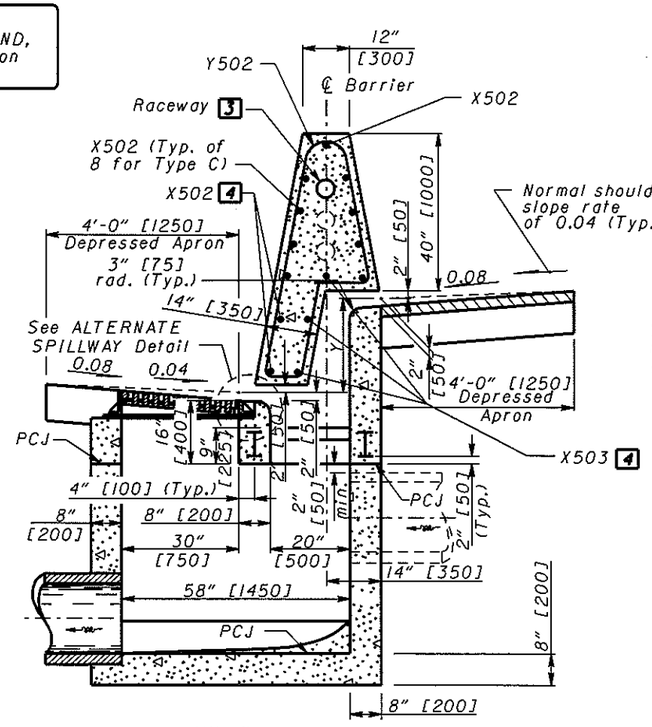

TYPE C
H=42" [1050]

SECTION D-D

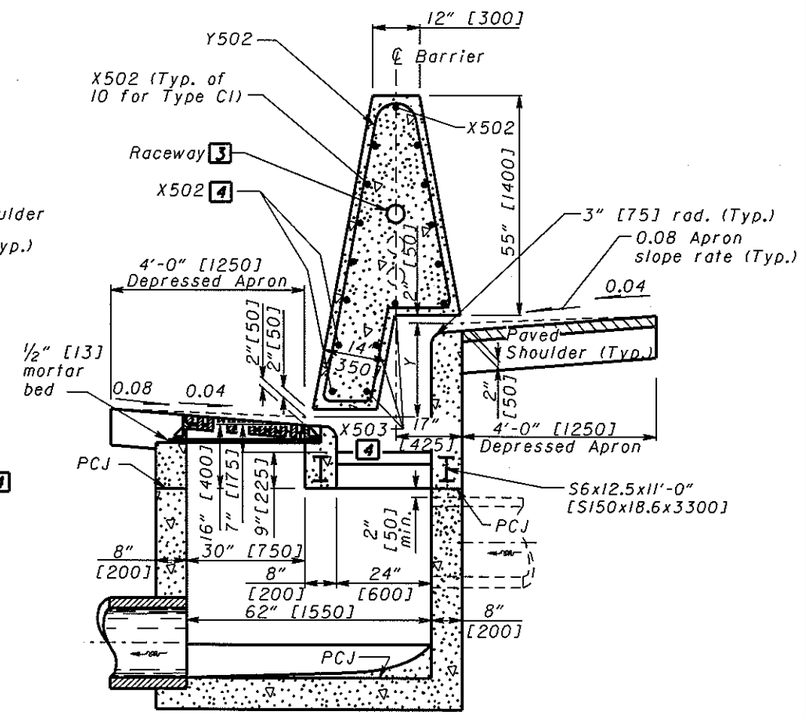

TYPE CI
H=57" [1450]

SECTION D-D

OHIO DEPARTMENT OF TRANSPORTATION

STATE HYDRAULIC ENGINEER

DATE
7-16-04
7-15-05

HYDRAULIC ENGINEER
W. Wawszkiewicz

All metric dimensions (in brackets []) are in millimeters unless otherwise noted.

OFFICE OF STRUCTURAL ENGINEERING

STANDARD HYDRAULIC CONSTRUCTION DRAWING

INLET No. 3 FOR SINGLE SLOPE BARRIER, TYPES C & CI

NUMBER
1-2.2

2/2