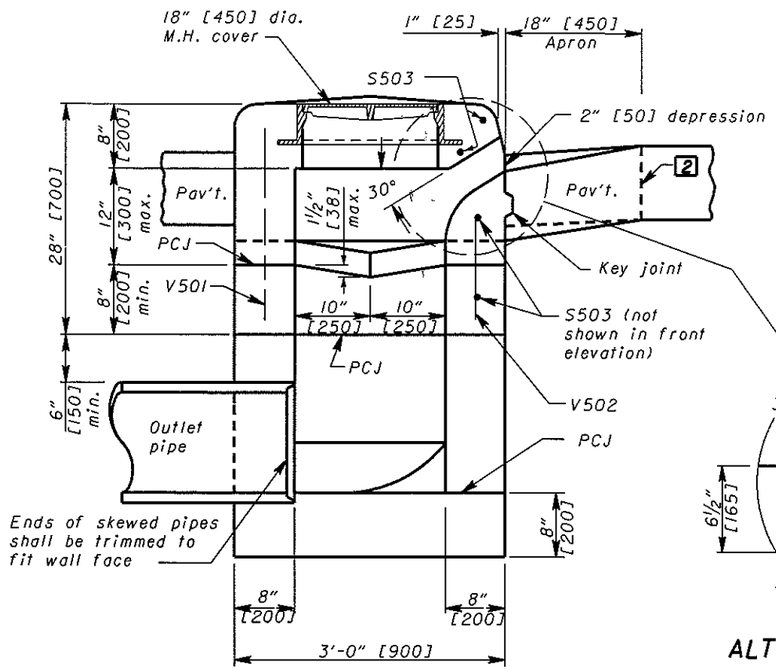

SECTION A-A
(See Sht. 1/2.)

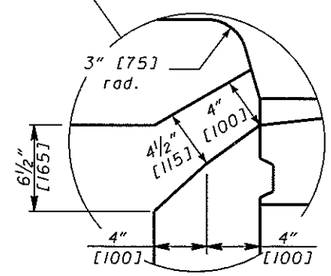

ALTERNATE OPENING

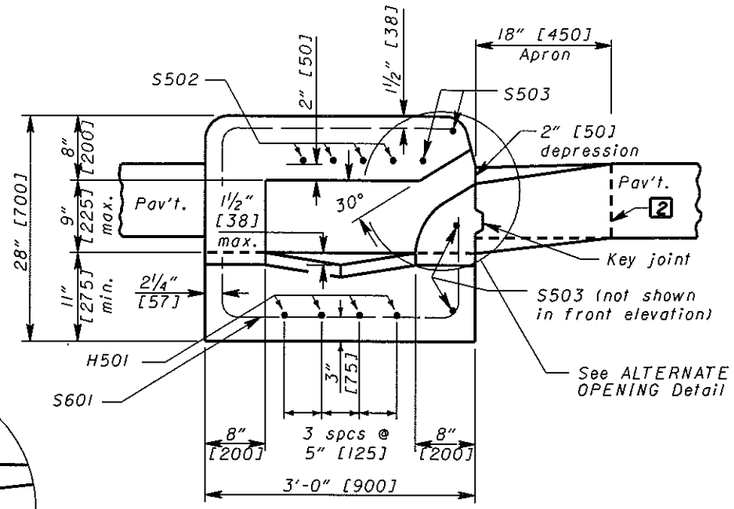

SECTION B-B
(See Sht. 1/2.)

See Sheet 1 of 2 for NOTES and LEGEND

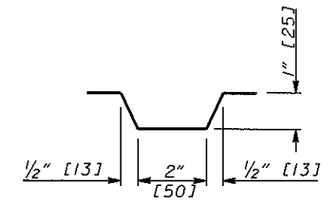

KEY JOINT

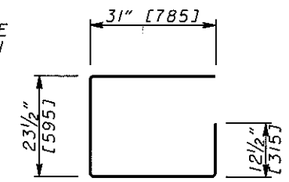

S601

#6 [#19M] ROUND BAR

BENDING DIAGRAM

CONCRETE AND REINFORCING QUANTITIES (English)

INLET LENGTH	CONCRETE (cubic yards)	REINFORCING S601 #6 bar No.	S601 Length	S501 #5 bar No.	S501 Length	S502 #5 bar No.	S502 Length	S503 #5 bar No.	S503 Length	H501 #5 bar No.	H501 Length	V501 #5 bar No.	V501 Length	V502 #5 bar No.	V502 Length	Weight (lbs.)
6'	2.2	5	8'-2"	4	2'-7"	4	4'-4"	4	7'-0"	4	3'-8"	4	2'-0"	2	1'-0"	145
8'	2.6	9	8'-2"	4	2'-7"	4	6'-4"	4	9'-0"	4	5'-8"	4	2'-0"	2	1'-0"	219
10'	3.0	13	8'-2"	4	2'-7"	4	8'-4"	4	11'-0"	4	7'-8"	4	2'-0"	2	1'-0"	293
12'	3.4	17	8'-2"	4	2'-7"	4	10'-4"	4	13'-0"	4	9'-8"	4	2'-0"	2	1'-0"	367
14'	3.8	21	8'-2"	4	2'-7"	4	12'-4"	4	15'-0"	4	11'-8"	4	2'-0"	2	1'-0"	442
16'	4.2	25	8'-2"	4	2'-7"	4	14'-4"	4	17'-0"	4	13'-8"	4	2'-0"	2	1'-0"	516
18'	4.6	29	8'-2"	4	2'-7"	4	16'-4"	4	19'-0"	4	15'-8"	4	2'-0"	2	1'-0"	590
20'	5.0	33	8'-2"	4	2'-7"	4	18'-4"	4	21'-0"	4	17'-8"	4	2'-0"	2	1'-0"	664

CONCRETE AND REINFORCING QUANTITIES (Metric)

INLET LENGTH (m)	CONCRETE (m^3)	REINFORCING S601 #19M No.	S601 Length (mm)	S501 #16M No.	S501 Length (mm)	S502 #16M No.	S502 Length (mm)	S503 #16M No.	S503 Length (mm)	H501 #16M No.	H501 Length (mm)	V501 #16M No.	V501 Length (mm)	V502 #16M No.	V502 Length (mm)	Mass (kg)
1.8	1.7	5	2480	4	775	4	1300	4	2100	4	1100	4	610	2	300	67
2.4	2.0	9	2480	4	775	4	1900	4	2700	4	1700	4	610	2	300	102
3.0	2.3	13	2480	4	775	4	2500	4	3300	4	2300	4	610	2	300	136
3.6	2.6	17	2480	4	775	4	3100	4	3900	4	2900	4	610	2	300	171
4.2	2.9	21	2480	4	775	4	3700	4	4500	4	3500	4	610	2	300	206
4.8	3.2	25	2480	4	775	4	4300	4	5100	4	4100	4	610	2	300	240
5.4	3.5	29	2480	4	775	4	4900	4	5700	4	4700	4	610	2	300	275
6.0	3.8	33	2480	4	775	4	5500	4	6300	4	5300	4	610	2	300	310

Note: The above tables of quantities is included with this drawing for estimating purposes only. The cost of furnishing and placing all concrete, reinforcing steel, casting, etc., shall be included in Item 604 for payment. All straight bars are #5 [#16M].

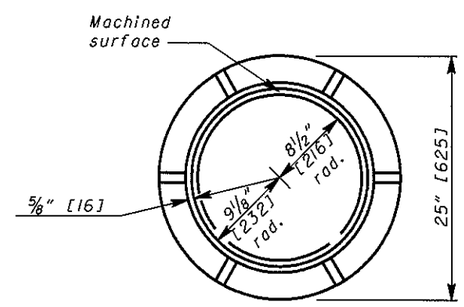

PLAN OF FRAME

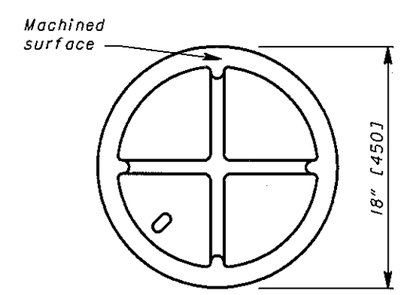

BOTTOM PLAN OF COVER

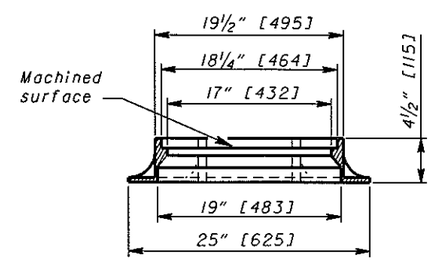

FRAME SECTION
MANHOLE FRAME

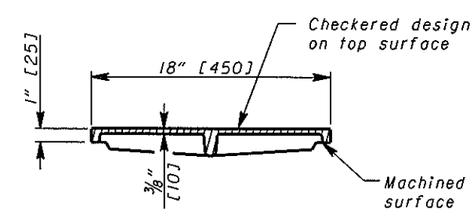

COVER SECTION
MANHOLE COVER

OHIO DEPARTMENT OF TRANSPORTATION
STATE HYDRAULIC ENGINEER

DATE
7-20-01
7-19-02
7-15-05

HYDRAULIC ENGINEER
M. Wowszkiewicz

All metric dimensions (in brackets [ ]) are in millimeters unless otherwise noted.

OFFICE OF STRUCTURAL ENGINEERING

STANDARD HYDRAULIC CONSTRUCTION DRAWING
MEDIAN INLET No. 2

NUMBER
1-1.1

2/2