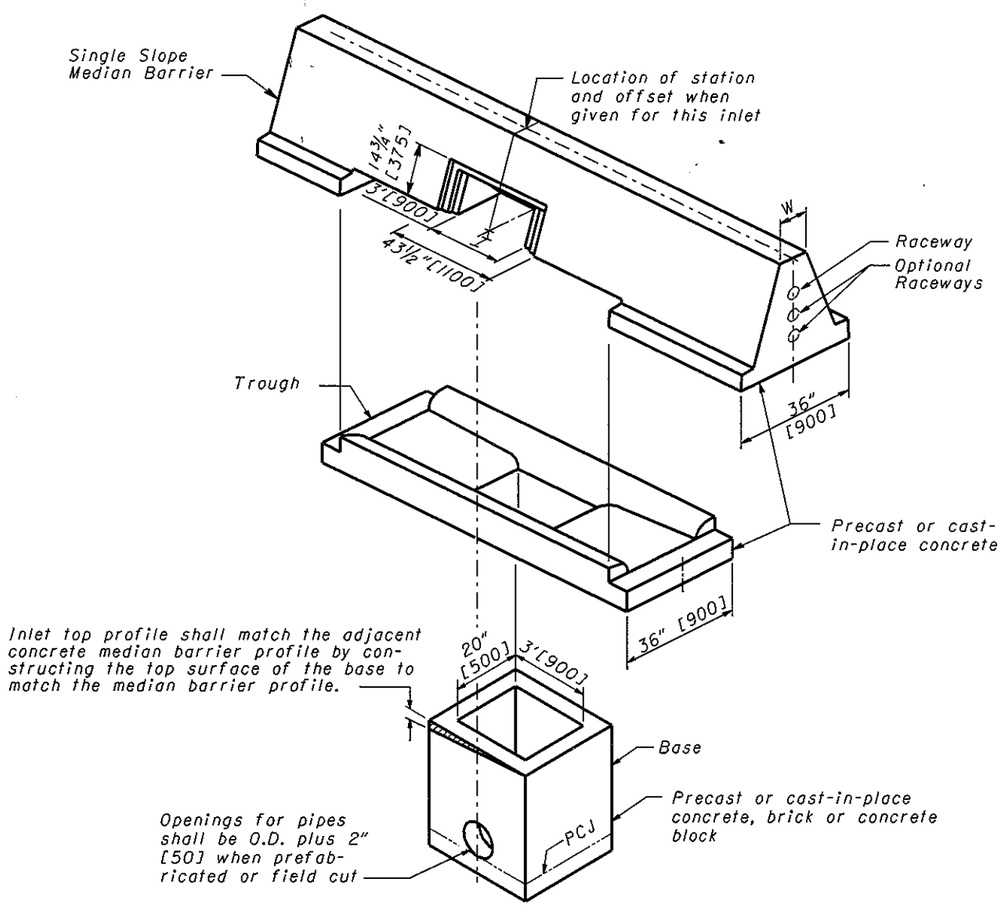

PICTORIAL VIEW

NOTES

GENERAL: For details of Single Slope Concrete Barriers, see **SCD RM-4.3**.

WALLS: The walls between the bottom slab and the upper permissible construction joint may be built of brick, concrete block or cast-in-place concrete, 8" [200] nominal thickness for depths of 12' [3.5 m] or less. Precast walls shall have a minimum thickness of 6" [150] and be reinforced sufficiently to permit shipping and handling without damage.

CONCRETE: Cast-in-place concrete is to be Class C. All precast concrete shall meet the requirements of CMS 706.13. Required markings shall include the Inlet number. Exposed concrete surfaces of the barrier shall be sealed with an approved sealer.

REINFORCING STEEL: Reinforcing steel shall be epoxy coated in accordance with CMS 509.09.

STEPS: Steps shall be in accordance with **SCD MH-1.1**.

INLETS OVER 12 FEET [3.5 m] IN DEPTH: Such inlets shall be precast or cast-in-place concrete; reinforced with #5 [#16M] bars on 12" [300] centers both vertically and horizontally with 2" [50] clearance from the inside wall face.

OPENINGS: Pipe openings shall be the outside diameter of the pipe being supplied plus 2" [50] when fabricated or field cut. Fill any voids per CMS 601.

ACCESS DOOR: The steel door, frame and all inserts, shall be galvanized. The hex head bolts shall be stainless steel.

DEPRESSED APRON: Aprons on both sides of the inlet shall be sloped toward windows and filled with Class C concrete. On superelevated sections, the aprons shall be sloped as shown in Section C-C.

PCJ: Permissible construction joint.

PAYMENT: Payment will be made at the unit price bid per Each for **Item 604 - Inlet, No. 4 for Single Slope Barrier, Type ____ (A, B, A1, or B1)** and shall include all materials, reinforcing steel, inlets, raceways, wiring, labor and incidentals required to construct the inlet as shown.

LEGEND

[1] A 1½" [38] minimum exp. joint shall be provided in concrete pavement or concrete shoulders.

[2] 4" [100] electrical raceway, if required elsewhere in the plans. See RACEWAY PLACEMENT Details on Sheet 3.

STANDARD INLET TYPES

INLET NO. 4	W	H	A	B
Type A	8" [200]	42" [1050]	6" [150]	24" [600]
Type A1	8" [200]	57" [1450]	3⅛" [75]	29¾" [750]
Type B	12" [300]	42" [1050]	4" [100]	28" [700]
Type B1	12" [300]	57" [1450]	1⅛" [25]	33¾" [850]

OHIO DEPARTMENT OF TRANSPORTATION

STATE HYDRAULIC ENGINEER

DATE
7-16-04
7-15-05

HYDRAULIC ENGINEER
W. Wawszkiewicz

All metric dimensions (in brackets [ ]) are in millimeters unless otherwise noted.

OFFICE OF STRUCTURAL ENGINEERING

STANDARD HYDRAULIC CONSTRUCTION DRAWING

INLET No. 4 FOR SINGLE SLOPE BARRIER, TYPES A, B, A1 & B1

NUMBER
1-2.4