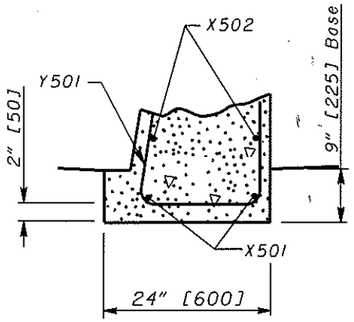

PARTIAL SECTION B-B

See Sheet 1

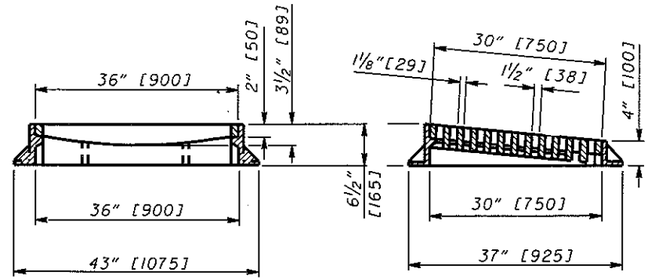

CASTING DETAILS

STEEL LIST (For Estimating Purposes Only)										
INLET No. 3	X501 #5 [#16M]		X502 #5 [#16M]		Y501 #5 [#16M]		Y502 #5 [#16M]		S6x12.5 [S150x18.6]	
	Straight		Straight		Bent		Bent			
	No.	Length	No.	Length	No.	Length	No.	Length	No.	Length
Type D	4	4'-8" [1400]	8	19'-8" [5900]	8	8'-8" [2630]	5	7'-0" [2140]	2	11'-0" [3300]

For NOTES, LEGEND, Plan and Section A-A, see Sheet 1.

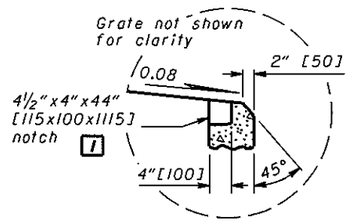

ALTERNATE SPILLWAY DETAIL

See SECTION D-D

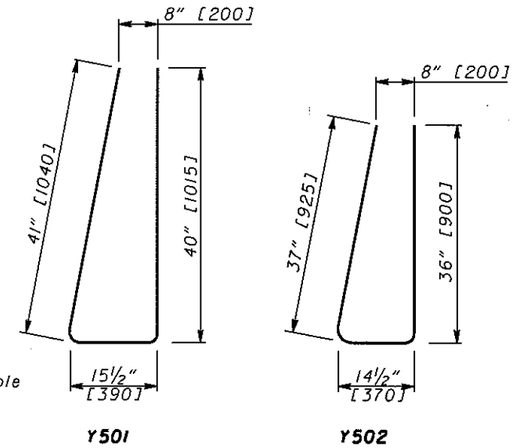

BENDING DIAGRAMS

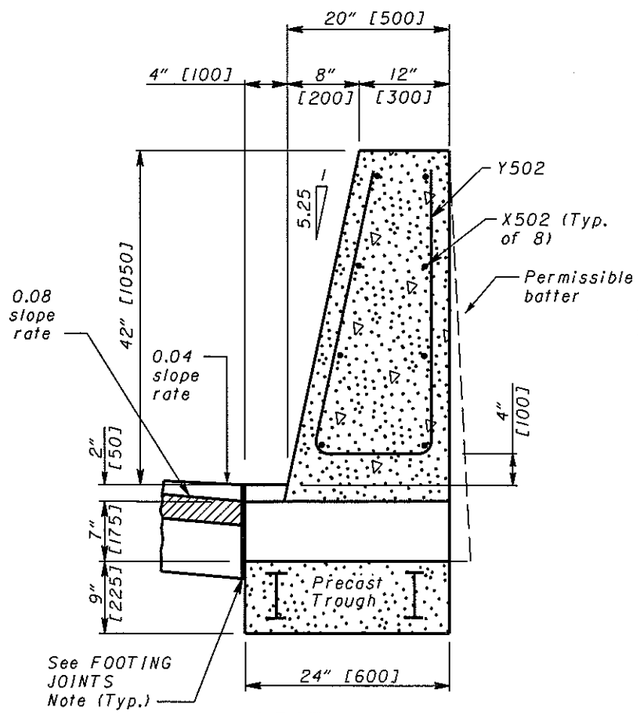

SECTION C-C

See Sheet 1

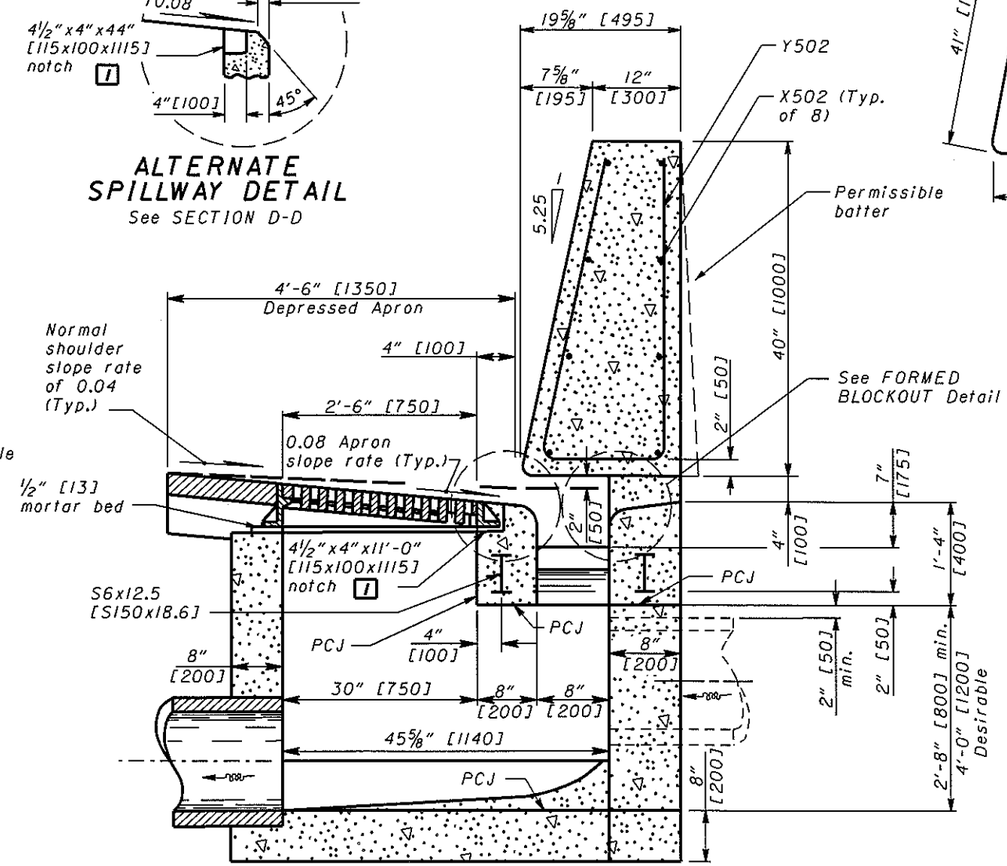

SECTION D-D

See Sheet 1

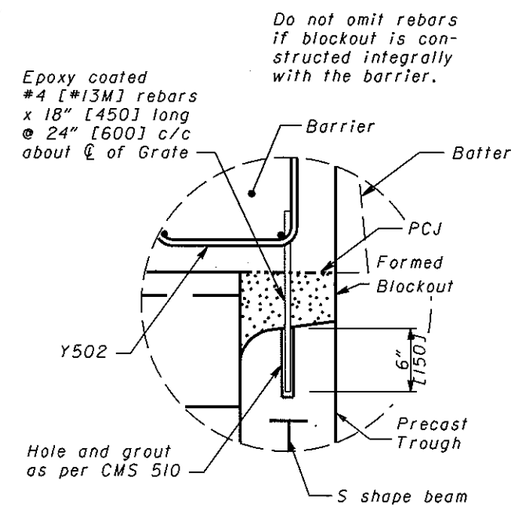

FORMED BLOCKOUT DETAIL

OHIO DEPARTMENT OF TRANSPORTATION

STATE HYDRAULIC ENGINEER

DATE 7-16-04 7-15-05

HYDRAULIC ENGINEER M. Wowszkiewicz

All metric dimensions (in brackets [ ]) are in millimeters unless otherwise noted.

OFFICE OF STRUCTURAL ENGINEERING

STANDARD HYDRAULIC CONSTRUCTION DRAWING

INLET No. 3 FOR SINGLE SLOPE BARRIER, TYPE D

NUMBER 1-2.3

2/2