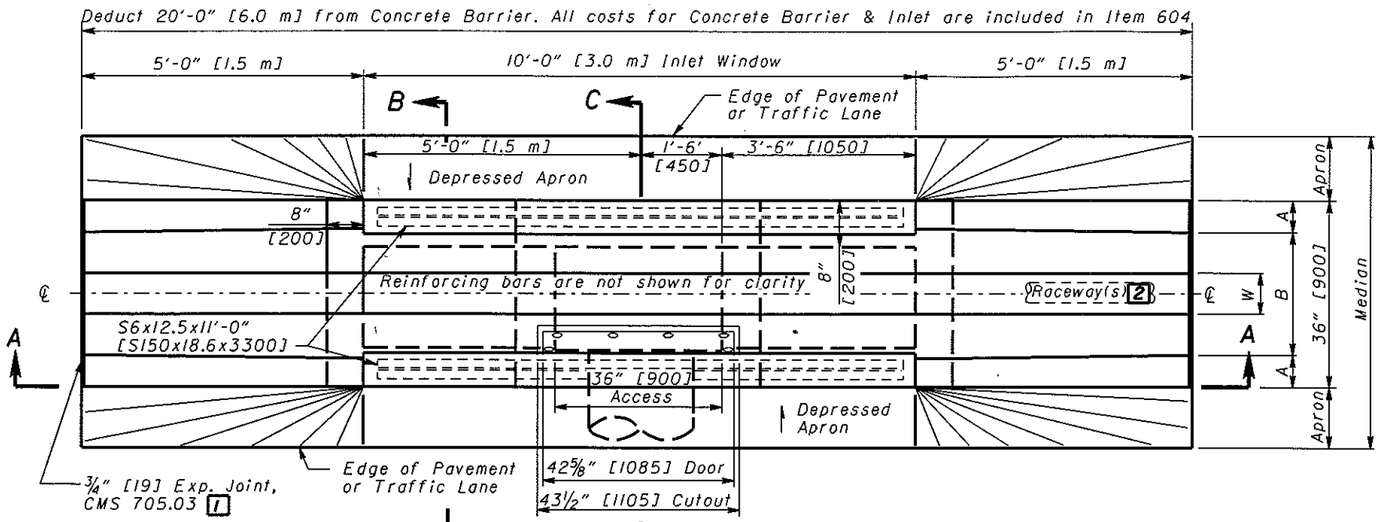

PLAN VIEW
NOT TO SCALE

NS - Near Side
FS - Far Side

For Dimensions W, H, A and B, see Standard Inlet Types on Sheet 1.

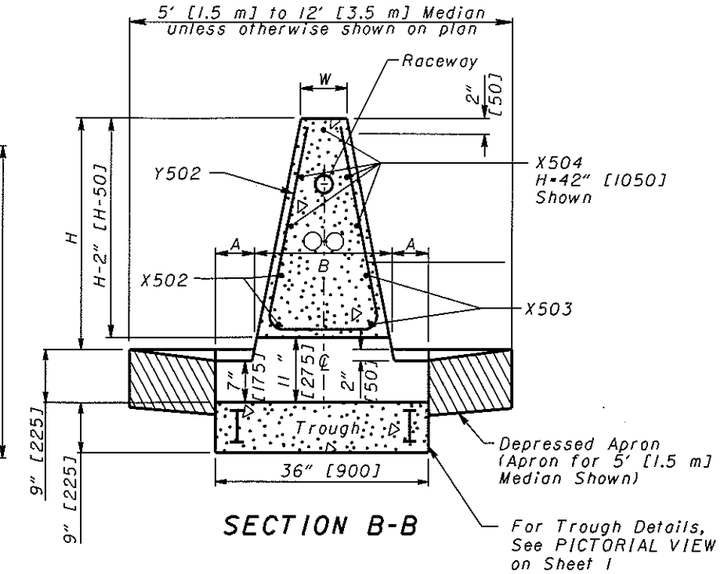

SECTION B-B

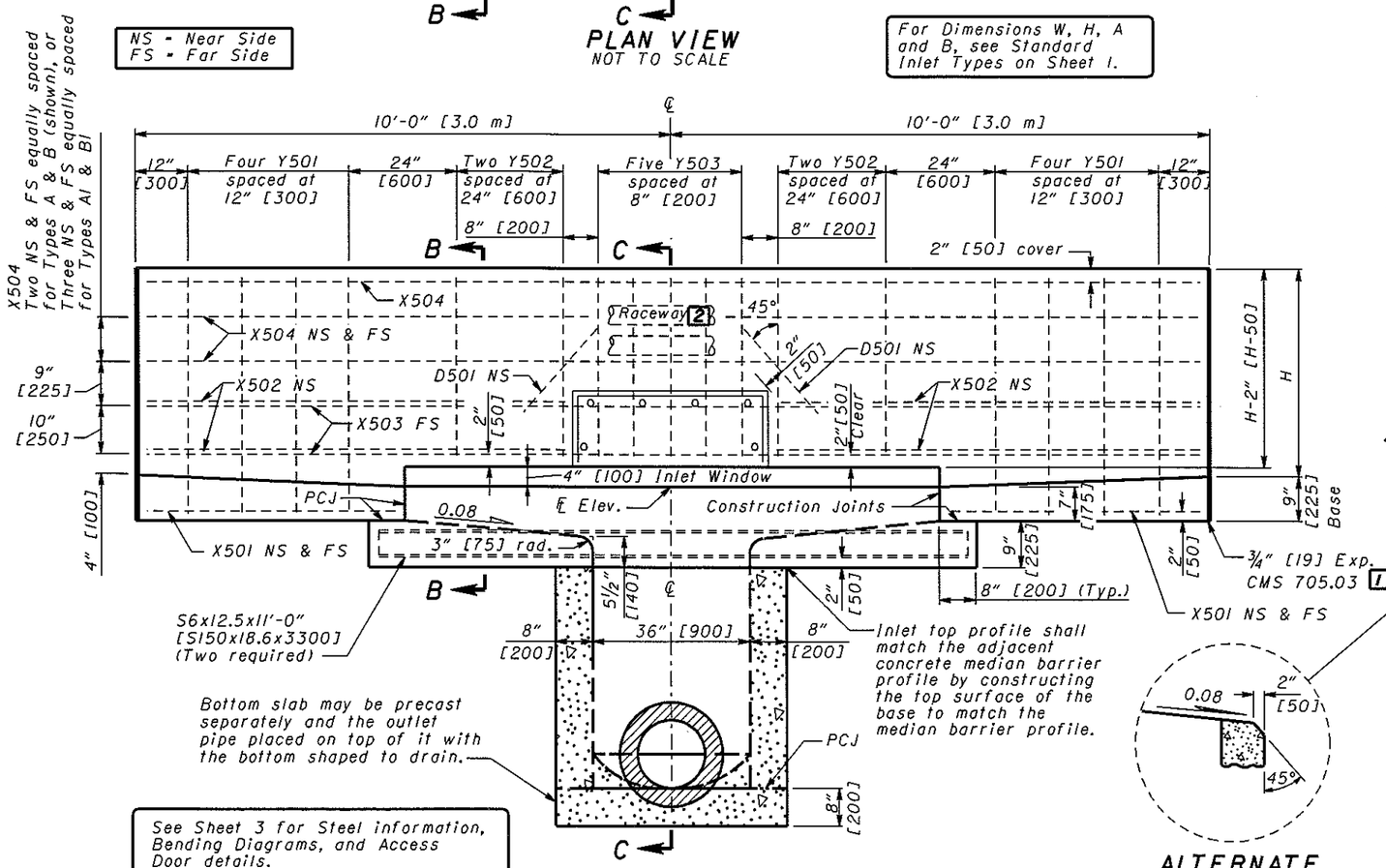

See Sheet 3 for Steel information, Bending Diagrams, and Access Door details.

SECTION A-A

ALTERNATE SPILLWAY DETAIL

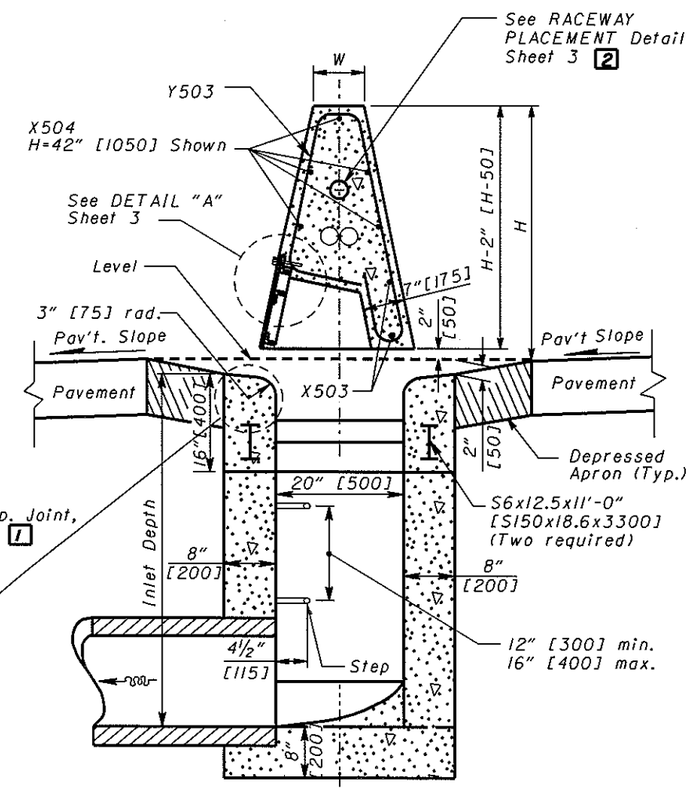

SECTION C-C

OHIO DEPARTMENT OF TRANSPORTATION

STATE HYDRAULIC ENGINEER

DATE
7-16-04
7-15-05

HYDRAULIC ENGINEER
W. Wawszkiewicz

All metric dimensions (in brackets [ ]) are in millimeters unless otherwise noted.

OFFICE OF STRUCTURAL ENGINEERING

STANDARD HYDRAULIC CONSTRUCTION DRAWING

INLET No. 4 FOR SINGLE SLOPE BARRIER, TYPES A, B, A1 & B1

NUMBER 1-2.4