STEEL LIST (English) (For Estimating Purposes Only)

INLET NO. 4	X501 #5 bar Straight		X502 #5 bar Straight		X503 #5 bar Straight		X504 #5 bar Straight		Y501 #5 bar Bent		Y502 #5 bar Bent		Y503 #5 bar Bent		D501 #5 bar Straight		S6x12.5	
	No.	Length	No.	Length	No.	Length	No.	Length	No.	Length	No.	Length	No.	Length	No.	Length	No.	Length
Type A	4	4'-8"	4	7'-10"	2	19'-8"	5	19'-8"	8	9'-3"	4	7'-3"	5	6'-3"	2	2'-0"	2	11'-0"
Type AI	4	4'-8"	4	7'-10"	2	19'-8"	7	19'-8"	8	12'-3"	4	10'-3"	5	9'-5"	2	2'-0"	2	11'-0"
Type B	4	4'-8"	4	7'-10"	2	19'-8"	5	19'-8"	8	9'-9"	4	7'-9"	5	7'-6"	2	2'-0"	2	11'-0"
Type BI	4	4'-8"	4	7'-10"	2	19'-8"	7	19'-8"	8	12'-9"	4	10'-9"	5	10'-5"	2	2'-0"	2	11'-0"

STEEL LIST (Metric) (For Estimating Purposes Only)

INLET NO. 4	X501 #16M Straight		X502 #16M Straight		X503 #16M Straight		X504 #16M Straight		Y501 #16M Bent		Y502 #16M Bent		Y503 #16M Bent		D501 #16M Straight		[S150x18.6]	
	No.	Length	No.	Length	No.	Length	No.	Length	No.	Length	No.	Length	No.	Length	No.	Length	No.	Length
Type A	4	1400	4	2350	2	5900	5	5900	8	2810	4	2200	5	1980	2	610	2	3300
Type AI	4	1400	4	2350	2	5900	7	5900	8	3730	4	3120	5	2870	2	610	2	3300
Type B	4	1400	4	2350	2	5900	5	5900	8	2970	4	2360	5	2300	2	610	2	3300
Type BI	4	1400	4	2350	2	5900	7	5900	8	3880	4	3270	5	3190	2	610	2	3300

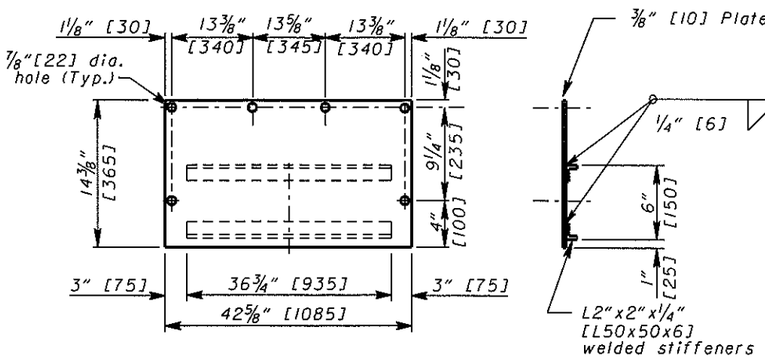

FRONT SIDE

ACCESS DOOR DETAILS

See Sheet 1 for NOTES and LEGEND. See Sheet 2 for Plan, Elevation, and Section Views.

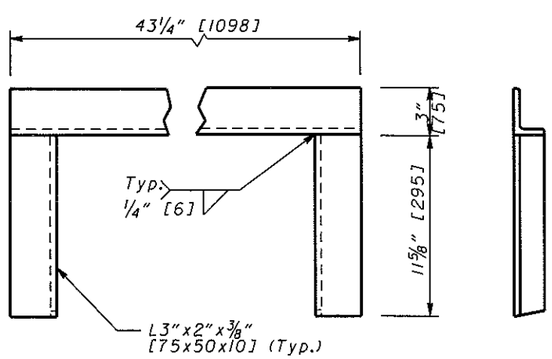

FRONT SIDE

WELDED FRAME DETAIL

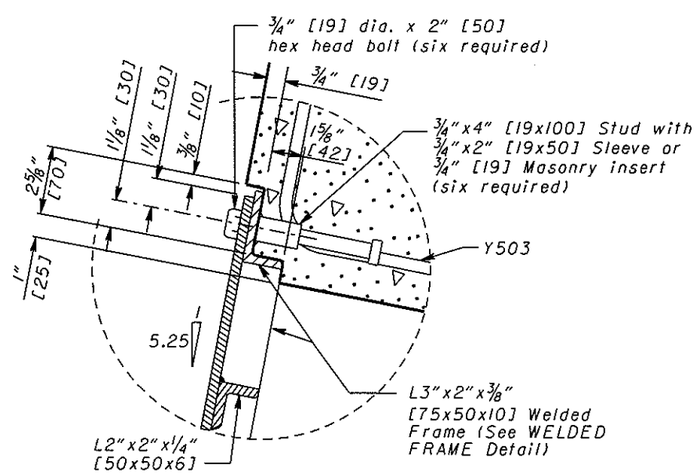

DETAIL "A"

See SECTION C-C ON Sheet 2

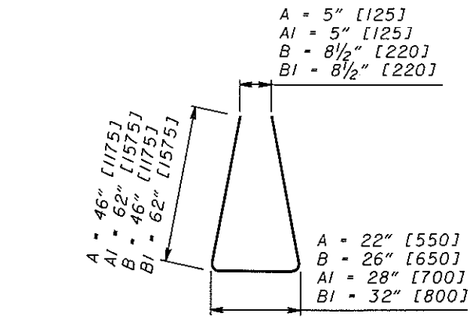

Y501

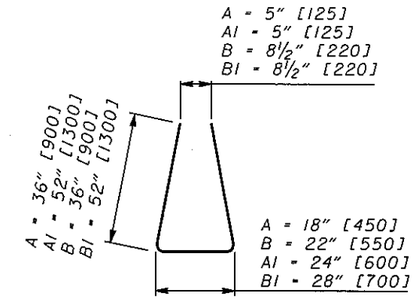

Y502

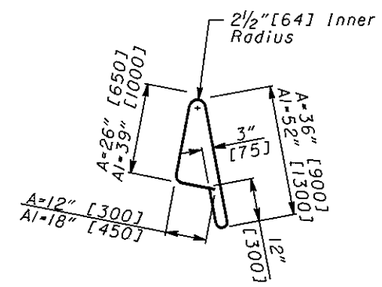

Y503
For Types A and AI

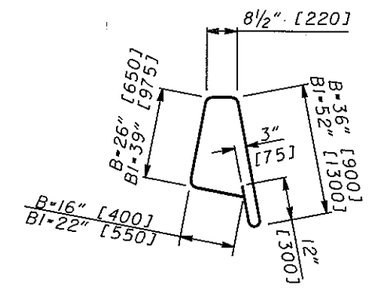

Y503
For Types B and BI

BENDING DIAGRAMS

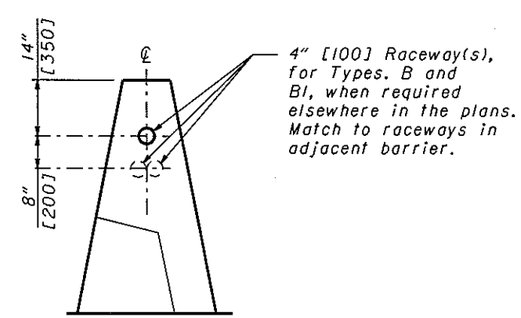

RACEWAY PLACEMENT
(Over Access Cutout)

OHIO DEPARTMENT OF TRANSPORTATION
STATE HYDRAULIC ENGINEER

DATE
7-16-04
7-15-05

HYDRAULIC ENGINEER
W. Wawszkiewicz

All metric dimensions (in brackets [ ]) are in millimeters unless otherwise noted.

OFFICE OF STRUCTURAL ENGINEERING

STANDARD HYDRAULIC CONSTRUCTION DRAWING

INLET No. 4 FOR SINGLE SLOPE BARRIER, TYPES A, B, AI & BI

NUMBER
I-2.4

3/3