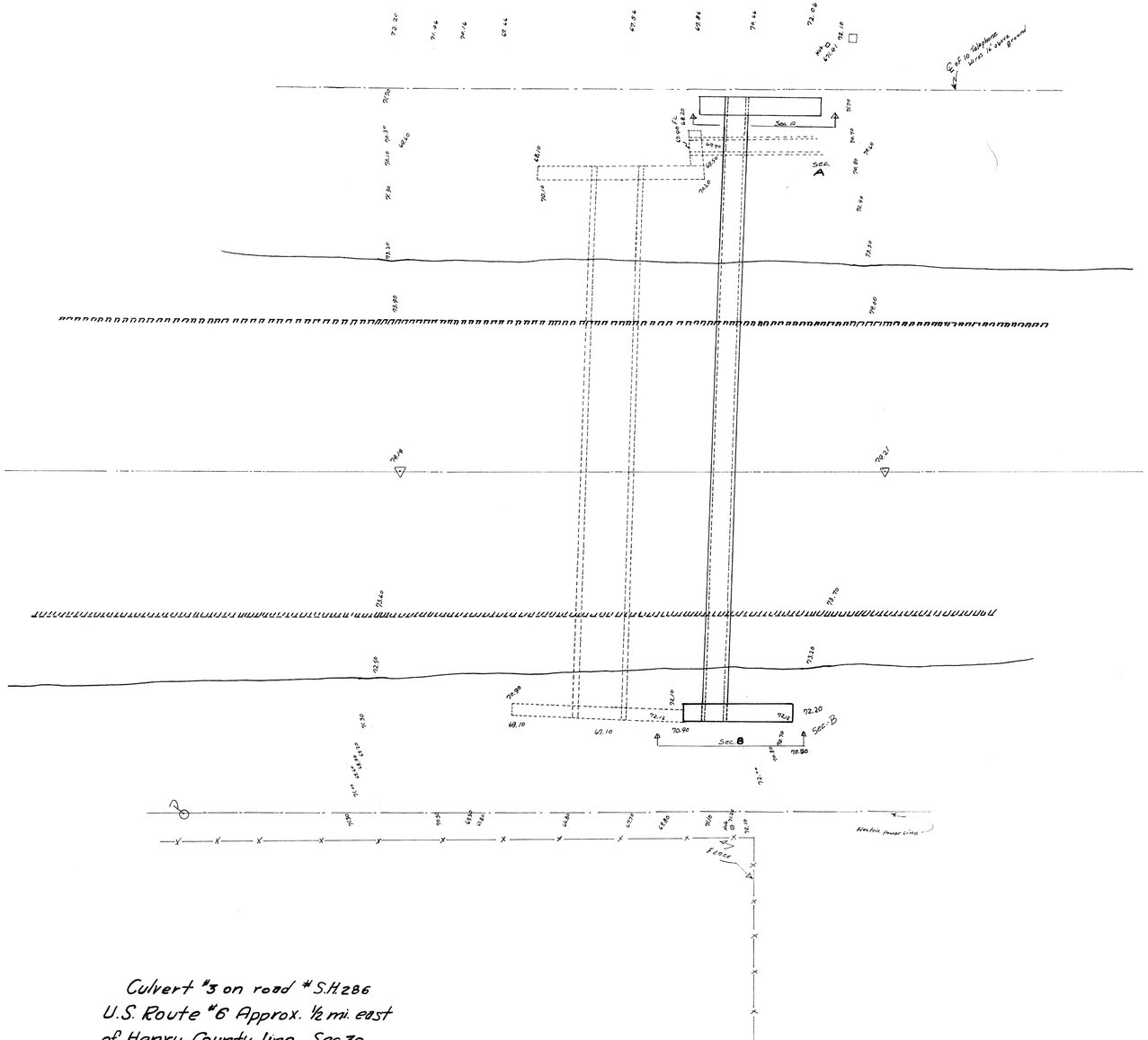

Culvert #3 on road # S.H. 286
U.S. Route #6 Approx. ½ mi. east
of Henry County line Sec. 30
Grand Rapids Twp. Wood County
OHio April 17, 1967

Items
52.0' OF 18" Type B-706.02 CL II pipe
603.04 Type B- Bedding
13.89 Cu. yr. of Class C Concrete

Reinforcing Steel List

Mark	SIZE	Shape	Number	Length	Weight
WSA	#8	Bent	5	10'-10"	36.85
WSB	"	"	6	6'-7"	41.26
WSC	"	Str.	2	4'-9"	10.01
WSD	"	"	2	2'-7"	5.46
WSE	"	"	3	7'-6"	29.75
WSF	"	"	9	8'-6"	35.46
WSG	"	"	4	1'-6"	6.25
					189.94

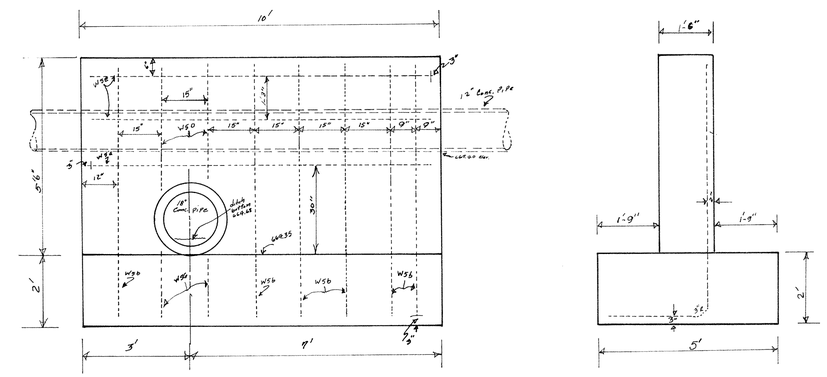

North Concrete Headwall

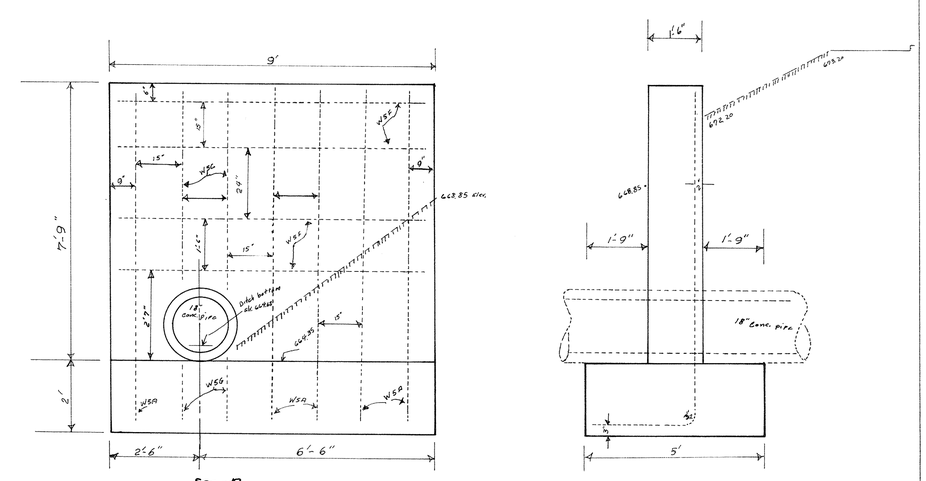

South Concrete Headwall