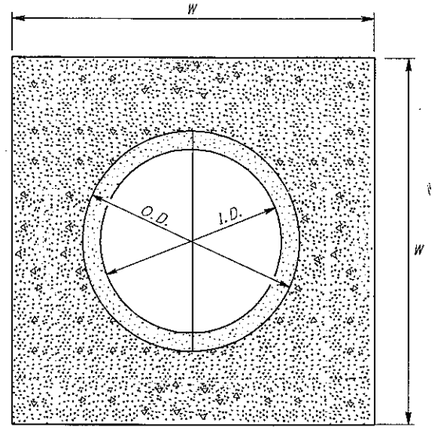

SECTION A-A
(NTS)

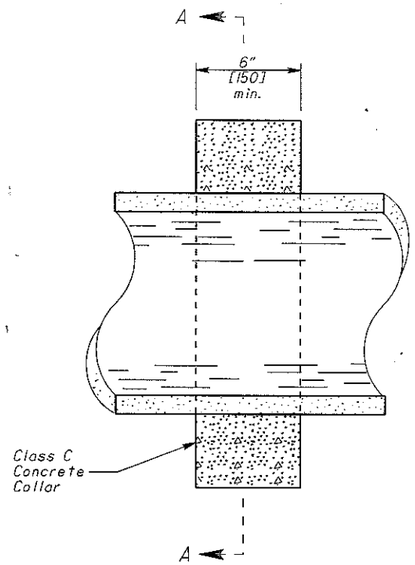

ANTI-SEEP COLLAR
(NTS)

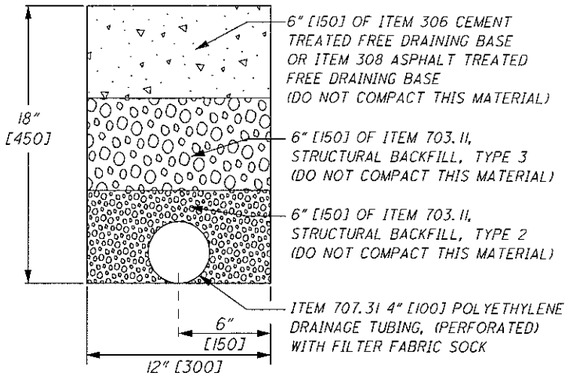

EXFILTRATION TRENCH
(NTS)

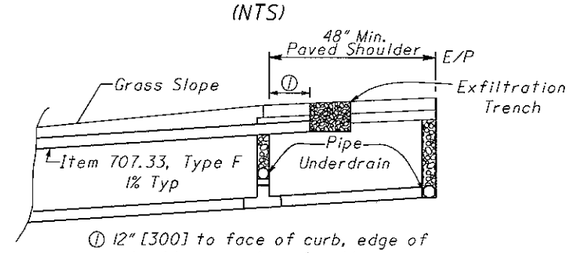

① 12" [300] to face of curb, edge of shoulder, or edge of gutter

EXFILTRATION TRENCH
OUTLET ON SLOPE
(NTS)

DIAMETER (I.D.) (FT.)	CONCRETE - C.Y. DIMENSION OF COLLAR W X W (FT.)		
	3X3	4X4	5X5
1	0.15	0.28	0.45
2	N/A	0.24	0.40
3	N/A	N/A	0.33

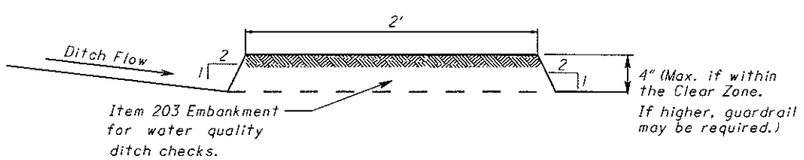

WATER QUALITY DITCH CHECK
(NTS)

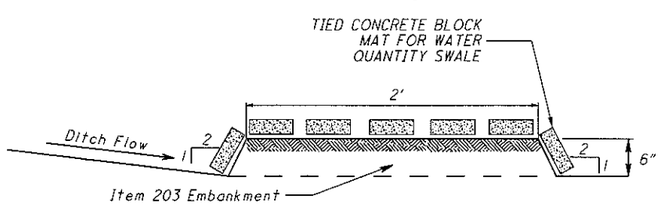

WATER QUANTITY DITCH CHECK
(NTS)

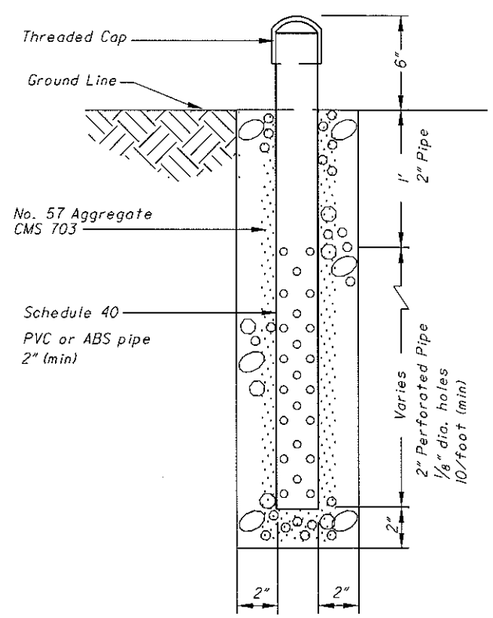

OBSERVATION WELL
NO SCALE

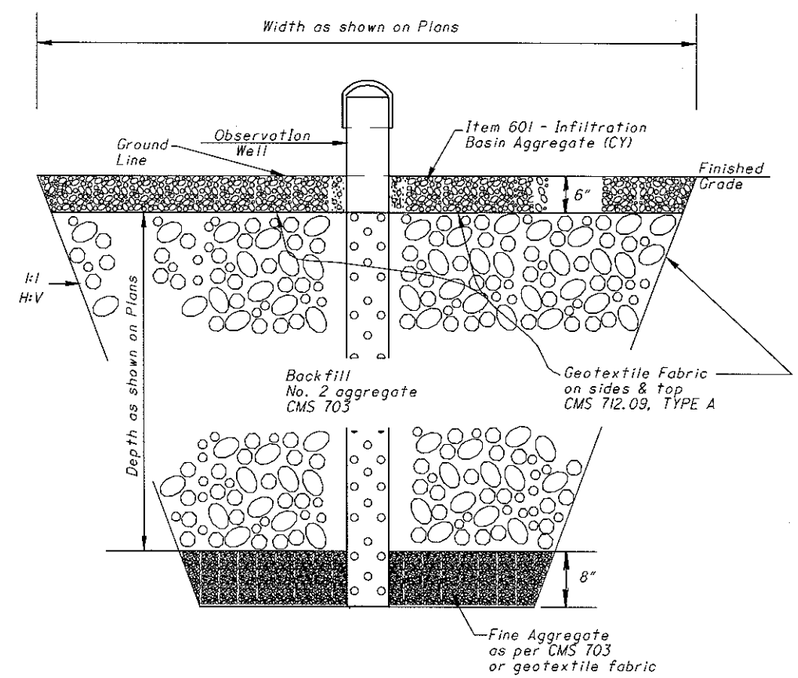

INFILTRATION TRENCH
NO SCALE

NOTES

ANTI-SEEP COLLARS: An anti-seep collar shall be provided as shown in the plans. Payment for the collar shall be at the contract price for **ITEM 602, CONCRETE MASONRY.**

WATER QUALITY DITCH CHECK: A water quality ditch check shall be placed as shown in the plans. All embankment used shall conform to CMS 703.16.A. Payment for this work shallbe at the contract price for **ITEM 203, EMBANKMENT, FOR WATER QUALITY DITCH CHECK.**

WATER QUANTITY DITCH CHECK: A water quantity ditch check shall be placed as shown in the plans. All embankment used shall conform to CMS 703.16.A. Payment for this work shall be at the contract price for **ITEM 203, EMBANKMENT and ITEM 601, TIED CONCRETE BLOCK MAT FOR WATER QUANTITY SWALE.**

OBSERVATION WELL: The observation well shall be constructed to a depth & location as shown in the plans. All materials and labor including excavation and backfill shall be paid for at the contract price for **ITEM 604 OBSERVATION WELL.**

INFILTRATION TRENCH: The infiltration trench shall be constructed to the dimensions shown on the plan. The top 6 inch covering shall be paid for at the contract price for **ITEM 601 INFILTRATION BASIN AGGREGATE.**

All other materials and labor, including excavation, geotextile fabric, and backfill shall be paid for at the contract price for **ITEM 203 SPECIAL, INFILTRATION TRENCH.**

EXFILTRATION TRENCH: The exfiltration trench and outlets for the exfiltration trench shall be located as shown on the plans. The exfiltration trench shall be paid for at the contract price for **ITEM 8XX EXFILTRATION TRENCH.** Outlets for the exfiltration trench shall be paid for at the contract price for **ITEM 603 CONDUIT, TYPE F.**

OHIO DEPARTMENT OF TRANSPORTATION
STATE HYDRAULIC ENGINEER

DATE
04-16-04
01-21-05
5-12-05
7-15-05
10-21-05

HYDRAULIC ENGINEER
M. Wawszkiewicz

ALL METRIC DIMENSIONS (IN BRACKETS [] ARE IN MILLIMETERS UNLESS OTHERWISE NOTED.

OFFICE OF STRUCTURAL ENGINEERING

STANDARD HYDRAULIC CONSTRUCTION DRAWING
WATER QUALITY- MISCELLANEOUS

NUMBER
WQ-1.2

1 / 1