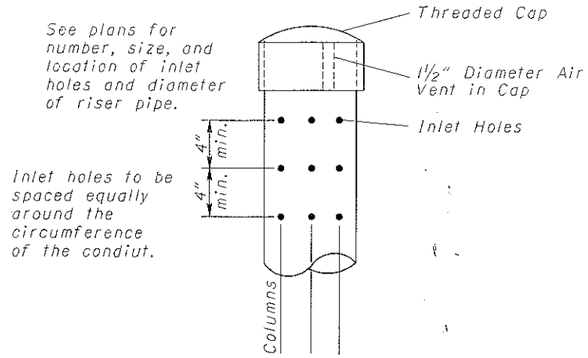

PERFORATED RISER
NOT TO SCALE

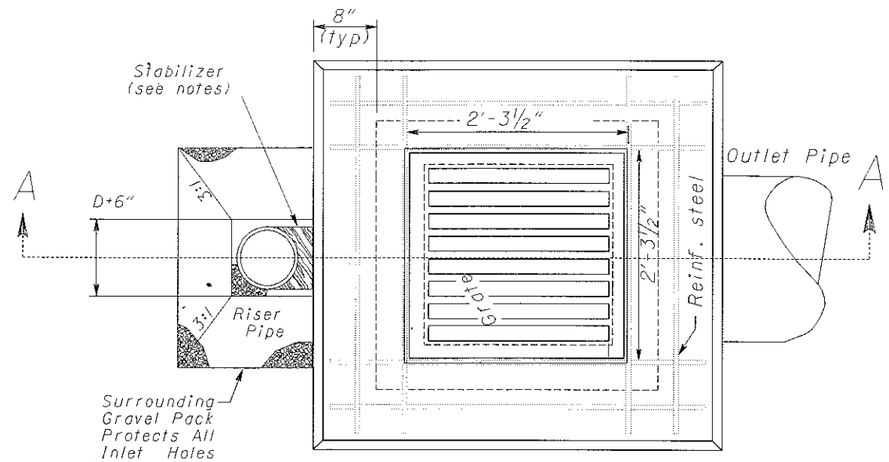

PLAN VIEW (DETENTION SHOWN)
NOT TO SCALE

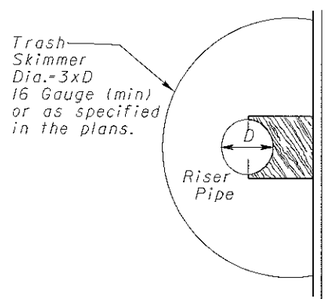

PLAN VIEW (RETENTION SHOWN)
NOT TO SCALE

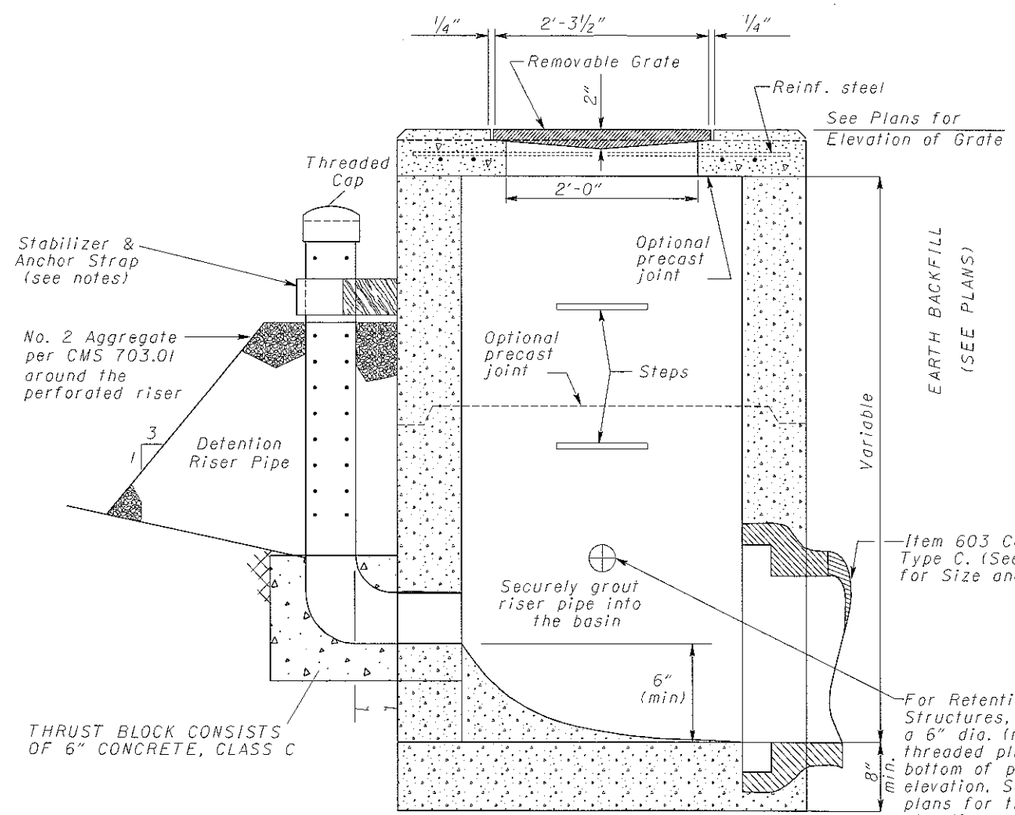

SECTION A-A (DETENTION SHOWN)
NOT TO SCALE

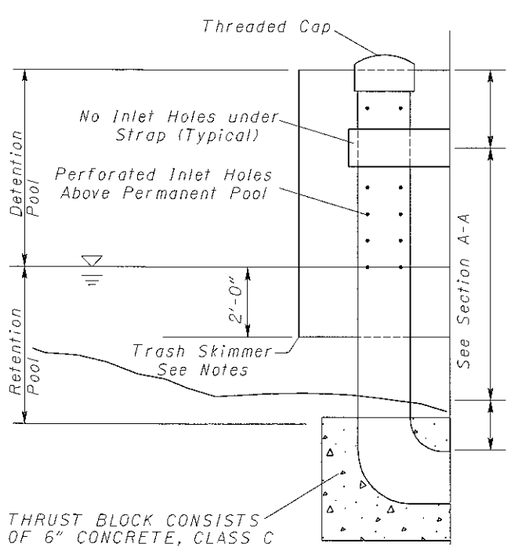

RETENTION RISER PIPE
NOT TO SCALE

NOTES

LOCATION AND ELEVATION: When given on the plans, the location and the elevation are at the top center of the grate. The orifice holes should be placed at the elevations as shown on the plans.

BASIN MATERIALS: The basin dimensions, materials, and grate to be per CB-1.2 except as detailed herein. Side inlet windows shall not be used.

All aggregate shown shall meet **CMS 203.02.H, NATURAL GRANULAR MATERIALS** and specified gradations.

RISER PIPE: Use schedule 40 Polyvinyl Chloride Conduit. Perforations shall be only as detailed in the plans.

TRASH SKIMMER: Use trash skimmer screens to protect the perforated riser. It must extend from the top of the riser to 2' below the permanent pool level and be open at the top and bottom. The radius of the trash skimmer shall be 3 times the diameter of the riser pipe or as shown on the plans. Trash skimmer shall be stainless steel or galvanized steel per CMS 711.02. Maximum perforation size shall be 2 inches. Securely fasten trash skimmer to the basin using hardware galvanized per CMS 711.02.

STABILIZER AND ANCHOR STRAP: Securely fasten the riser pipe to the basin in the vertical position using a stabilizer and anchor strap that consists of a universal clamp or a strap and a block. All metal components shall be galvanized or stainless steel. All other materials shall be rot resistant.

PAYMENT: All materials and labor, including excavation and backfill, shall be paid for at the contract price for **Item 604 - Water Quality Basin, Retention (Detention)**

MAXIMUM NUMBER OF PERFORATED COLUMNS				
RISER DIAMETER (in.)	HOLE DIAMETER, INCHES			
	¼"	½"	¾"	1"
4	8	8	--	--
6	12	12	9	
8	16	16	12	8
10	20	20	14	10
12	24	24	18	12

OHIO DEPARTMENT OF TRANSPORTATION
Tim Keller
ENGINEER OF BRIDGES

DATE
04-16-04

HYDRAULIC ENGINEER
J. Syor

OFFICE OF STRUCTURAL ENGINEERING

STANDARD HYDRAULIC CONSTRUCTION DRAWING
WATER QUALITY BASINS

NUMBER
WQ-1.1

1/1